2596995-A EN 1911

RS SERIES

ENGINEERING MANUAL

Steam humidifier
Nortec **RS series**

Humidification and Evaporative Cooling

condair

Thank you for choosing Condair

Installation date (MM/DD/YYYY):
Commissioning date (MM/DD/YYYY):
Site:
Model:
Serial number:

Contact

Condair Ltd.
2740 Fenton Road, Ottawa, Ontario K1T3T7
TEL: 1.866.667.8321, FAX: 613.822.7964
EMAIL: na.info@condair.com, WEBSITE: www.condair.com

Proprietary Notice

This document and the information disclosed herein are proprietary data of Condair Ltd. Neither this document, nor the information contained herein shall be reproduced, used, or disclosed to others without the written authorization of Condair Ltd., except to the extent required for installation or maintenance of recipient's equipment.

Liability Notice

Condair Ltd. does not accept any liability due to incorrect installation or operation of the equipment or due to the use of parts/components/equipment that are not authorized by Condair Ltd.

Copyright Notice

© Condair Ltd. All rights reserved.

Technical modifications reserved

Contents

1	**Nortec RS Steam Humidifier**	**1**
1.1	General Description	1
1.2	Features	2
1.2.1	Detailed Features List	3
1.3	Options	4
1.4	Accessories	5
1.5	Humidifier Components	7
1.6	User Interface	11
2	**Operation**	**12**
2.1	Functional description	12
2.2	Sequence of Operation	13
2.3	Drain interval time / water consumption	15
3	**Product Specifications**	**16**
3.1	Model Specifications	16
3.1.1	Model Designation	16
3.1.2	Nortec RS Specifications	17
3.2	Specification Drawings	20
4	**Planning**	**25**
4.1	Location and Clearances	25
4.2	Services	27
4.3	Installation Requirements	28
4.3.1	Humidifier Mounting	28
4.3.2	Water and Drainage Connections	30
4.3.3	Steam Distribution	31
4.3.3.1	Duct Distributors	31
4.3.3.2	Blower Packs	33
4.3.3.3	Atmospheric Steam and Condensate Lines	34
4.3.4	Electrical Connection	38
4.4	Control System Design	39
4.4.1	Control Signal Input	40
4.4.1.1	Analog Control Signals	40
4.4.1.2	Digital Control Signals	41
4.4.2	Linkup	42
4.4.3	Humidity Control Design	43
4.4.3.1	Duct Distribution Control Design	43
4.4.3.2	Space Distribution Control Design	45
4.4.4	Remote Fault Indication Board	46
4.4.5	Accessory Board	47
4.5	Preventative Maintenance	48

5 Total Humidification Load Calculation 49
5.1 Total Humification Load 49
5.1.1 Calculating Base Humidification Load 50
5.1.1.1 Total Unconditioned Air Supply Volume 50
5.1.1.2 Unconditioned Supply Air Moisture 50
5.1.1.3 Conditioned Air Moisture 51
5.1.1.4 Base Humidification Load 51
5.1.2 Moisture Content Equilibrium 52
5.1.3 Condensate Loss 53

6 Product Selection 55
6.1 Humidifier and Options 55
6.2 Steam Distribution Equipment 57

A Appendix i
A.1 Sample Specification i
A.2 Blank Schedule iii

Introduction

Purpose of Manual

The Nortec RS Engineering Manual is intended to give the reader a good understanding of the Nortec RS steam humidifier, its operating principles, features and specifications. It also describes how to calculate the total humidification load for a project, how to select a model, its options and accessories, as well as how to plan for installation of the unit.

Intended Audience

The Nortec RS Engineering Manual is intended for consulting engineers who design and implement the humidification requirements for a facility.

Other Helpful Resources

Visit www.na.condairhelp.com and use the free Condair online program – **H**umidifier **E**ngineering and **L**oad-sizing **P**rogram (H.E.L.P.) to assist you with absorption distance calculations, selection of humidifiers, steam distributors, controls and accessories.

Tutorials on using this program are available from the Literature & Media section of the Condair website – www.condair.com.

Additional information on the effects of humidity, relative humidity calculations, load calculations, and recommended design conditions can be found in the Condair Humidification Load Calculation Manual (Condair document 2553856).

All documents referenced in this manual are available from www.condair.com.

1 Nortec RS Steam Humidifier

1.1 General Description

The Nortec RS humidifier is an atmospheric steam generator, which operates on the resistance heating principle – heat is generated by the resistive heating elements immersed in water. The Nortec RS humidifier is designed for direct room humidification using a blower pack, or humidification through the ducts in an air handling unit using a steam distributor. It is suitable for a variety of humidification applications including commercial offices, hospitals, computer rooms, museums, clean rooms, schools, printing plants, and other applications where reliability is required.

The Nortec RS humidifier comes in three different housing sizes – small, medium and large depending on the steam output. The small model has capacities ranging from 10 lb/h (4.5 kg/h) to 20 lb/h (9.1 kg/h), the medium model from 30 lb/h (13.6 kg/h) to 90 lb/h (40.8 kg/h), and the large model from 90 lb/h (40.8 kg/h) to 180 lb/h (81.6 kg/h). The small and medium size models can be ordered with a built-on blower pack (refer to *Figure 1*). *Table 8 on page 17*, *Table 9 on page 19* and *Table 9 on page 19* list the specifications for each model.

The large model has two steam cylinders instead of one. The construction is similar to the single cylinder units except that it has two fill and drain connections, two driver boards, and one primary voltage terminal and two low voltage terminal strips – one for each steam cylinder (designated "A" and "B"). The separate driver boards and low voltage terminal strips allow the large model to handle two separate sets of control signals. This gives the large Nortec RS humidifier the flexibility to operate in parallel mode or series mode for connecting multiple humidifiers together for the same zone.

In parallel mode, one set of control signals is wired to the driver board and low voltage terminal strip for steam cylinder "A", which controls the humidity in both zones. Both steam cylinders respond equally to the demand for humidity.

In series mode, one set of control signals is wired to the driver board and low voltage terminal strip for steam cylinder "A", which control the humidity in both zones. In this mode, both steam cylinders operate in a staged fashion – steam cylinder "A" can be configured to handle output from 0-50% of demand, and cylinder "B" from 50-100% of demand.

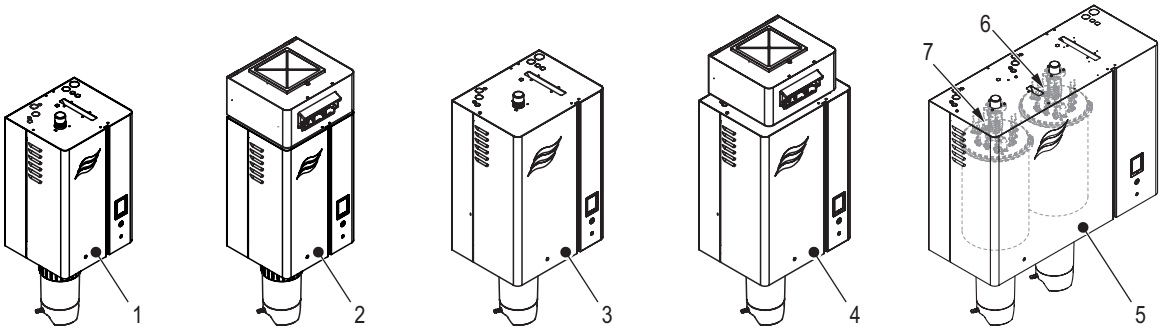

Figure 1: Nortec RS Humidifier Models

1 RS 10 - RS 20 – small model with single steam cylinder
2 RS 10 - RS 20 – small model with single steam cylinder and built-on blower pack
3 RS 30 - RS 90 – medium model with single steam cylinder
4 RS 30 - RS 90 – medium model with single steam cylinder and built-on blower pack
5 RS 90 - RS 180 – large model with dual steam cylinders
6 Steam cylinder "A", large model
7 Steam cylinder "B", large model

1.2 Features

The Nortec RS humidifier has many advanced features that set it apart from other humidifiers.

- Pure, clean steam at an economical price.
- Fully configured and packaged unit that is ready to install out-of-the-box.
- Patented Scale Management option provides easiest maintenance on the market.
- State-of-the-art touchscreen controller provides great user experience and advanced user controls.
- Robust product from the company that has been in the market for over 40 years, and continues to perfect humidification technology.
- Most accurate steam output with optional High Precision control.
- Zero side clearance for small installation footprint.
- Standard integration into building management systems (BMS) using Modbus, BACnet MS/TP or BACnet IP. Other protocols are available as options.
- Standard drain water cooling which tempers drain water to meet local plumbing code requirements before it is emptied into the drain.
- USB port for loading software updates and downloading performance data.
- Connect up to 5 steam cylinders together in a "Main-Extension" configuration using Nortec Linkup to satisfy large humidification needs.
- SIM card for storage of operating parameters and settings.
- Aesthetic cabinet design.
- Remote interface to control and modify humidifier settings.

Refer also to the detailed features listed in *Table 1*.

1.2.1 Detailed Features List

Table 1: Nortec RS Features

Feature		Description	Nortec RS	
			Standard	Optional
Control and User Interface Features	Touchscreen interface	Intuitive user interface to configure and monitor the humidifier.	✓	
	Digital graphic display	Displays visual feedback of the humidifier inputs (conditioned environment humidity and setpoints).	✓	
	On/Off control	Operate the equipment with simple On/Off controls.	✓	
	Up to two modulating control inputs per cylinder	Allows modulating humidifier output to improve accuracy of supply humidity.	✓	
	Integrated PI controller	Provides direct compatibility with humidity transducers (RH sensor) with adjustable setpoints and P/I parameters.	✓	
	Demand signal acceptance	Provides direct compatibility with modulating demand signals.	✓	
	Digital communication protocols	Provides BMS interface with integrated BACnet IP, BACnet MS/TP and Modbus protocols.	✓	
	BTL-certified protocols	Provides BTL-certified BACnet IP, BACnet MS/TP connectivity, and enables use of LonWorks.		✓
	Remote fault indication board	Allows dry contact feedback on unit operation.		✓
	Accessory relay board	Allows enabling/disabling of accessory devices such as fans and valves.		✓
	Remote interface	Allows direct Ethernet access to the humidifier through a PC.	✓	
	Independent circuits on multi-cylinder humidifiers	Allows for independent control of multiple humidifier cylinders through a common control system.	✓	
	Status indicator LED	Provides quick feedback on operating status of the unit.	✓	
	Adjustable units of measure	Display settings in metric or imperial units of measure.	✓	
	Manual output adjustment	Provides the ability to limit the maximum steam output of the humidifier.	✓	
Operation and Maintenance	Cleanable steam cylinder	Simple service of the steam cylinder.	✓	
	Scale Management	Provides separate removable scale collection tank for ease of maintenance when using potable water.		✓
	High Precision	Equips the unit with solid state relays for high accuracy steam output up to +/- 1%.		✓
	Drain water cooling	Drain water tempered to 140 °F (60 °C) during normal and manual operation.	✓	
	Potable and treated water usage	Compatible with standard potable water supplies as well as reverse osmosis or de-ionized water.	✓	
	Secondary drain water cooling valve	Adds a secondary valve for dedicated drain water cooling using potable water. This option is used when treated RO/DI water is being supplied to the main boiling tank.		✓
	Backflow prevention	Integrated air gap in fill cup provides protection for supply water systems.	✓	
	Extended fill cup	Accommodates backpressure up to 10 in H20 (2.49 kPa).		✓
	Keep Warm function	Provides improved humidifier response time.	✓	
Other	C-UL-US Listed	Certified to meet product standards as detailed by Underwriters Laboratories.	✓	
	Warranty	Provides guarantee against manufacturer defects. Refer to *"Warranty"*.	✓	
	Choice of steam distribution*	Allows for distribution to the conditioned environment directly with the Nortec RS Space model, or indirectly through duct distributors.	✓	
	Wall mounting	Provides a convenient means of integrating humidification needs.	✓	

* The Nortec RS Space model includes a steam distributor.

1.3 Options

Table 2 lists the options available for the Nortec RS humidifier. Detailed installation instructions are supplied with each option.

Table 2: Nortec RS Options

Option	Availability		Description
	Factory Installed	Field Install Kit	
Built-on blower pack	✓		A blower pack is used to distribute steam generated by the humidifier directly into a conditioned environment. The Nortec RS Space model comes with a factory-installed blower pack and internal steam and condensate connections. A remote-mounted blower pack is also available. Refer to "Blower Packs" on page 33 for more information.
Scale Management	✓	✓	Provides a separate reservoir underneath the steam cylinder for scale collection. The addition of this option reduces maintenance time significantly. Minerals removed from the water during steam production will collect in the scale reservoir rather than in the tank, away from the heating elements and drain pump. When minor maintenance is needed, the scale tank is easily removed and emptied in minutes.
High Precision	✓		Provides capability of humidifier to achieve +/- 1% steam output. Solid State Relays allow for rapid response upon call for humidity, adapting instantly to humidity demand. This allows for quick response and tight control of humidity. Also supplied are two fill valves for quicker response (turbo mode).
Mounting bar	✓	✓	Provides two mounting bars which fit into each other for wall mounting. One bar is fastened to the humidifier, and the other bar is fastened to the wall. The unit can be hung onto the wall by engaging the two mounting bars. **Note:** The unit can also be wall-mounted (without this option) using the keyhole cutouts on the back of the humidifier housing.
Mounting rack		✓	Stand-alone rack for mounting the Nortec RS humidifier.
Remote fault indication board	✓	✓	Printed circuit board (PCB) with relay contacts for connecting remote status displays for “Unit On”, “Steam”, “Error” and “Service”. Refer to "Remote Fault Indication Board" on page 46.
Accessory board	✓	✓	PCB with relay contacts for connecting other accessories such as fans and supply water flushing valves. Refer to "Accessory Board" on page 47.
Factory-configured control settings	✓		The humidifier can be factory-configured for the requested control signal acceptances. The humidifier can also be reconfigured in the field, as needed. Refer to Table 6 on page 10 for standard part numbers.
Fill cup extension		✓	Kit for extending the fill cup so the humidifier can accommodate backpressure up to 10 in H20 (2.49 kPa).
BTL-certified BACnet MS/TP digital communications	✓	✓	PCB to provide BTL-certified BACnet MS/TP connectivity.
BTL-certified BACnet IP digital communications	✓	✓	PCB to provide BTL-certified BACnet IP connectivity.
LonWorks digital communications	✓	✓	Supplementary board to provide LonWorks connectivity.

1.4 Accessories

Table 3 lists the accessories available for the Nortec RS humidifier. Detailed installation instructions are supplied with each accessory. Standard part numbers are also listed below.

Table 3: Nortec RS Accessories

Accessory	Description
External condensate cooling	Self-actuated and electric condensate waste water coolers are used to reduce waste water temperatures to below 140 °F (60 °C) before it is discharged into drains.
Steam distributor	Steam distributors are used for adding steam into ventilation ducts. They are available in three different steam capacities and various lengths to suit duct dimensions. Refer to Steam Distributor Installation Manual (Condair document 2556592) for additional details and part numbers.
SAM-e and Mini SAM-e distribution manifolds	The SAM-e distribution manifolds are used for adding steam into ventilation ducts larger than 24 in (6 cm) where either higher steam capacity or short absorption distance is required. The Mini SAM-e is available in dimensions under 24 in (61 cm). They are available in a range of sizes and steam capacities to match duct and humidifier requirements. Refer to SAM-e Engineering Manual (Condair document 1503529) for additional details and part numbers.
Remote blower pack	Blower packs are used for direct humidification of the conditioned environment. Blower packs are capable of distributing up to 100 lb/h (45 kg/h), should be selected to match or exceed humidifier capacity. Refer to Blower Pack Installation, Operation and Maintenance Manual (Condair document 2582277) for additional details.
On/Off humidistats	Condair offers a range of digital and mechanical On/Off duct and wall-mounted humidistats for use with control and high limit applications. Refer to Table 7 on page 11.
Modulating humidistats	Condair offers a range of digital modulating duct and wall-mounted humidistats for use with control and high limit applications. Refer to Table 7 on page 11.
Outdoor temperature sensors	Provides automatic humidistat setpoint reduction to prevent condensation on windows/surfaces adjacent to outdoor air. Refer to "Outdoor Temperature Setback" on page 44 for additional details. 2520263 – Duct-mounted temperature sensor 2553858 – Outdoor mounted temperature sensor
Humidity transducers	Condair offers a range of digital humidity sensors for duct and wall-mounting for use with control and high limit applications. Refer to Table 7 on page 11.
Air proving switch	Provides a mechanical differential pressure switch to enable humidifier operation when there is airflow through the ventilation ducts. Adjustable for pressures 0.05-12 in H2O (0.01-2.99 kPa). Refer to "Air Proving Switch" on page 43 for additional details.
Steam line reducers	Provides a means of adapting steam line diameters to match the diameter of the steam distributor. 1507846 – Steam line reducer (1-3/4 in to 7/8 in) copper 1508165 – Steam line reducer (1-3/4 in to 7/8 in) stainless steel
Condair flexible steam and condensate hose	Steam hoses can be used as steam distribution lines or as couplers between copper or stainless steel steam distribution lines. When used for steam distribution the maximum recommended hose length is 10 ft (3 m). Steam hose is available in two sizes. Condensate hose can be used for draining condensate, or coupling to copper or stainless steel condensate lines. 1328810 – Steam hose (7/8 in I.D.) per foot (30 cm) 1328820 – Steam hose (1-3/4 in I.D.) per foot (30 cm) 1328840 – Condensate hose (3/8 in I.D.) per foot (30 cm)
Large/small condensate trap tee	Condensate trap tee must be used to remove condensate that forms in steam distribution lines. Condair offers tees to match large and small steam lines. Offered in Copper only. 1329634 – Condensate trap tee – small (7/8 × 7/8 × 3/8 in) 1329635 – Condensate trap tee – large (1-3/4 × 1-3/4 × 3/8 in)
In-line water filter and replacement filter elements	In-line water filter to remove sediments in the supply water that can obstruct the fill valve strainer or drain fittings. 1329505 – In-line water filter (5 micron) 1329561 – Replacement filter cartridge (1 micron) 1329506 – Replacement filter cartridge (5 micron)

Table 3: Nortec RS Accessories, continued...

Accessory	Description
Condensate pump	High temperature condensate pump for pumping waste water from the Nortec RS or condensate from the distributor systems. 1429527 – Drain water sump pump, low flow 2524504 – Electric sump pump, medium flow 2576898 – Electric sump pump, high flow
Drain air gap reducer	All Nortec RS humidifiers require an air gap in the drain line as close as possible to the humidifier. The air gap reducer is a 2-1/2 in to 7/8 in (63.5 mm to 22 mm) fitting that can provide the required air gap. 2522172 – External drain air gap reducer
Pocket hygro-thermometer digital display	The pocket hygro-thermometer provides a means to check the humidity and temperature in a space. It is a useful tool for troubleshooting humidity problems. 1469595 – Pocket hygro-thermometer digital display
Transformer, plug-In, 120 VAC to 24 VAC	AC adaptor 120 VAC to 24 VAC, 40 VA for providing power to remote electronics/controls. 1603032 – Transformer, plug-In, 120 VAC to 24 VAC

1.5 Humidifier Components

Figure 2 shows the various components of the Nortec RS humidifier. The door panels have been removed for clarity.

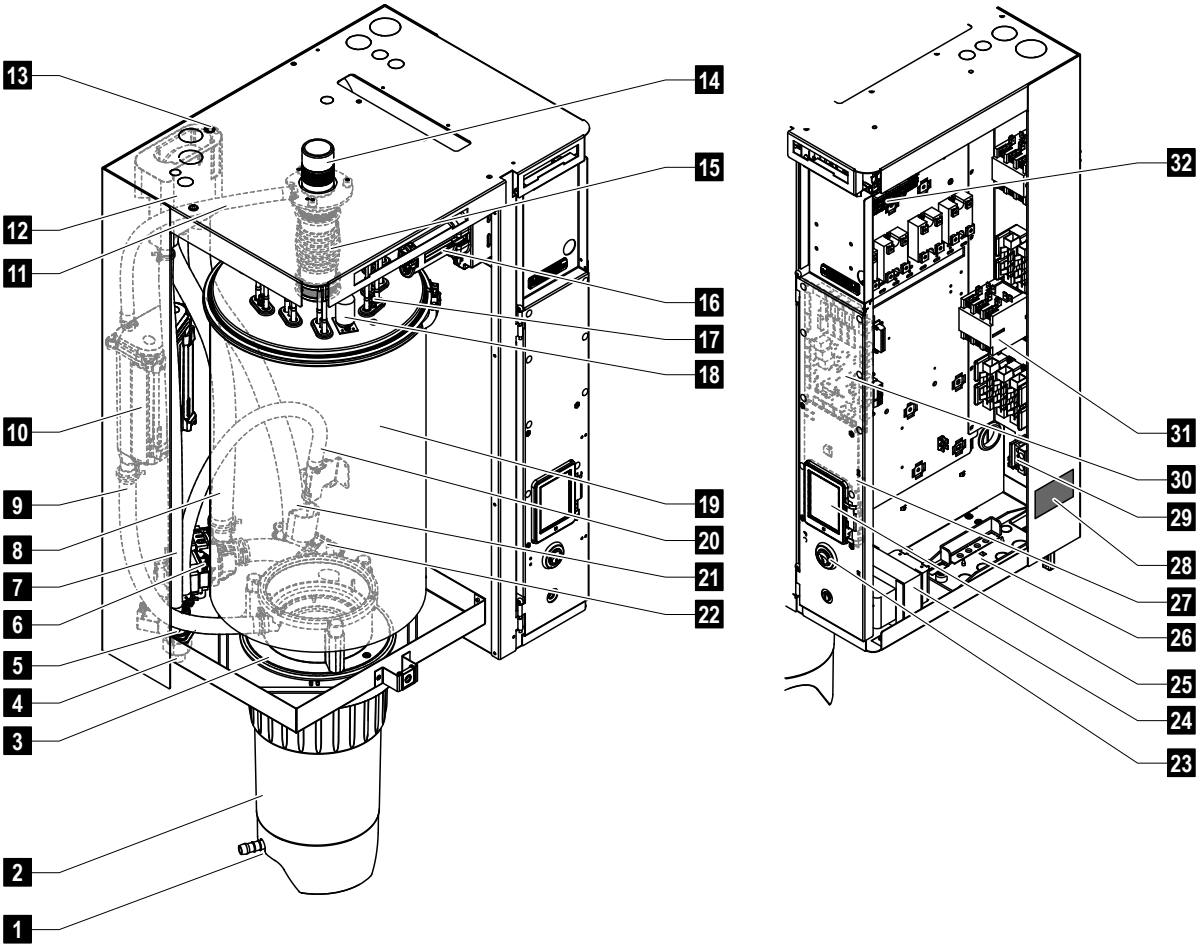

Figure 2: Nortec RS Humidifier Components (Medium Size Model Shown)

1 Scale collector tank drain valve (optional)
2 Scale collector tank (optional)
3 Coupling sleeve
4 Water supply connector (NPT 1/2")
5 Double inlet valve (valve 1: supply valve, valve 2: drain water cooling valve)
6 Drain pump
7 Water supply hose
8 Water filling and drain hose
9 Level hose
10 Level unit
11 Pressure equalizing hose
12 Fill cup
13 Condensate connector (to drain)
14 Steam connector 1.77" (ø45 mm)
15 Steam outlet hose
16 Heating cable plug
17 Heating elements
18 Excess temperature switch
19 Steam cylinder
20 Drain water cooling hose
21 Drain hose
22 Drain cup with drain connector 1.18" (ø30 mm)
23 Unit switch
24 Control voltage transformer
25 Touch screen display
26 Cable feed throughs
27 Control board
28 Specification label
29 Voltage supply terminals
30 Driver board
31 Main contactor
32 Heating section terminals

The Nortec RS humidifier housing contains two cabinets – the plumbing cabinet (on the left) and the controls cabinet (on the right) – refer to *Figure 2 on page 7*. *Table 4* summarizes the functions of the main components in these two cabinets.

Table 4: Nortec RS Humidifier Component Functions

Component		Function
Plumbing cabinet	Steam cylinder	Water reservoir in which boiling takes place. It houses a set of resistive heating elements that are used to boil the water. It has a steam outlet at the top, and a water inlet/outlet at the bottom.
	Cable harness with plug	Cable ahrness with plug that feeds electric current to the resistive heating elements housed in the steam cylinder.
	Drain canal	Combined drain outlet for discharge from the steam cylinder and fresh water for drain water cooling.
	Drain pump	Drains water out of the steam cylinder.
	Fill cup	Provides a gravity feed means to fill the steam cylinder through the drain pump. A built-in air gap prevents backflow.
	Fill valve	Controls the flow of feed water into the fill cup.
	Fill cup extension (optional)	Optional kit for extending the fill cup so the humidifier can accommodate backpressure up to 10 in H_2O (2.49 kPa).
Controls cabinet	High voltage terminal block	Primary power connection from the external disconnect switch to the humidifier.
	Contactor	Activates/deactivates power to the resistive heating elements in the steam cylinder.
	Driver board	Provides input and output connections to the humidifier components.
	Integrated control board	Controls all functions of the humidifier, and provides a user interface through the integrated touchscreen display. It also permits connection to multiple humidifiers, as well as to the BMS. An on-board USB port also permits exchange of data.
	Touchscreen display	User interface to monitor and control the humidifier.
	On/Off switch	Allows the user to turn the humidifier On and Off.
	Low voltage terminal strip	Terminal strip for connecting control signal inputs to the humidifier.
	Remote fault indication PCB	Optional printed circuit board with dry contacts to connect remote status displays for "Unit On", "Steam", "Error" and "Service".
	Accessory relay PCB (not shown)	Optional printed circuit board with dry contacts to enable/disable other accessories such as fans and supply water flushing valves.
	Transformer	Steps down primary voltage to 24 VAC to power the on-board low voltage electronics.

Part numbers and quantities for ordering Nortec RS options are shown in *Table 5*.

Table 5: Nortec RS Options, Part Number Matrix

	Nortec RS									
	unit size S			unit size M				unit size L		
	10	15	20	30	45	65	90	90	130	180
Process/Precision Provides capability of humidifier to achieve ± 1% humidity control*. Solid State Relays allow for rapid response upon call for humidity, adapting instantly to humidity demand. This allows for quick response and tight control of humidity. Also supplied are two fill valves for quicker response (turbo mode). This option is also recommended any time that the humidifier is being controlled by a modulating signal. * Humidity control is dependent on a variety of factors, including design of piping from humidifier to distributor, duct characteristics from distributor to space, control devices and locations. In-field results may vary.	**1x P**									
Scale tank Provides a separate reservoir underneath the steam cylinder for scale collection. The addition of this option reduces maintenance time significantly. Minerals removed from the water during steam production will collect in the scale reservoir rather than in the tank. For the double tank humidifiers (RS 135 and 180), order two for each humidifier. This option is recommended any time that the humidifier is being supplied with potable water.	**1x SC** **(2x SC for RS 90 large unit)**							**2x SC**		
Built-on Blower Pack For in-space applications.	**1x BOBP**							**not available for large unit**		
Remote operating and fault indication PCB with relay contacts for the connection of remote displays for "Operation", "Steam", "Fault" and "Service".	**1xRFI**									
Accessory Board PCB with relay contacts for the connection of remote fan enable (cylinder A/B) as well as hygiene flush (cylinder A/B).	**1x ACC**									
BACnet MSTP BTL PCB to provide BTL certified BACnet MSTP. This option also enables full Master functionality when using BACnet MSTP.	**1x BAC-BTL**									
LonWorks board Supplementary board to connect the Nortec RS to a building management system via LonWorks.	**1x LON**									

	Nortec RS									
	unit size S			unit size M				unit size L		
	10	15	20	30	45	65	90	90	130	180
Mounting rail Provides two mounting rails which fit into each other for wall mounting. One bar is fastened to the humidifier, the other bar is fastened to the wall. The unit can then be "hung" onto the wall by engaging the two mounting rails. Note: without this option, the unit may still be wall mounted using the key-hole cutouts on the back of humidifier housing.	**1x MP-S**			**1x MP-M**				**not available for large unit**		
Mounting rack basic Mounting rack for Nortec RS.	**1x MR-B-S**			**1x MR-B-M**				**1x MR-B-L**		
Height extension profiles for mounting rack basic Height extension profiles for mounting rack.	**1x MR-E**							**N/A**		
Screw feet for mounting rack basic Screw feet for levelling the mounting rack.	**1x MR-A**							**N/A**		
Pressure compensation kit Provides extension for the fill cup to overcome back pressure (including duct static pressure) in excess of 5-1/2" water column. Longer hoses included. Two required for double tank humidifiers.	**1x OPS**							**2x OPS**		
Secondary Valve Provides a secondary valve to use potable water for dedicated internal drain water cooling. This option can be included when treated RO/DI water is being supplied to the main boiling tank. This option saves expensive treated water by not sending it to drain for tempering. Note that this option should not be included with scale management since it is typically not required when supplying treated water.	**1x RO-A**							**1x RO-A**		

Part numbers for ordering control signal configurations for the Nortec RS humidifier are shown in *Table 6*.

Table 6: Nortec RS Control Signal Acceptance Part Numbers

Signal	Standard Part Numbers – Demand Signal Acceptance		Standard Part Numbers – Transducer Signal Acceptance	
	Single Channel	Dual Channel	Single Channel	Dual Channel
0-5 VDC	2523060	2523061	2523100	2523101
0-20 mA	2523062	2523063	2523102	2523104
4-20 mA	2523064	2523065	2523105	2523107
0-10 VDC	2523066	2523089	2523110	2523111
0-16 VDC	2523090	2523091	2523112	2523113
1-5 VDC	2523092	2523093	2523114	2523115
2-10 VDC	2523094	2523094	2523116	2523117
0-20 VDC	2523096	2523097	2523118	2523119

Part numbers for ordering other Condair accessories are shown in Table 7.

Table 7: Condair Humidistat Part Numbers

Part Number	Demand		Transducer		Digital	Mechanical	0-10 VDC	2-10 VDC	On/Off	Fan Start
	Duct-mounted	Wall-mounted	Duct-mounted	Wall-mounted						
2548732	✓	–	–	–	✓	–	–	–	✓	✓
2548731	–	✓	–	–	✓	–	–	–	✓	✓
2520273*	✓	–	–	–	✓	–	–	–	✓	✓
1510142	–	✓	–	–	✓	–	✓	–	–	✓
2520266*	✓	–	–	–	✓	–	✓	–	–	✓
1329102	–	✓	–	–	–	✓	–	–	✓	–
1329108	✓	–	–	–	–	✓	–	–	✓	–
1509858	–	–	–	✓	✓	–	–	✓	–	–
1509857	–	–	✓	–	✓	–	–	✓	–	–

* Remote-mounted digital controller included for ease of access.

1.6 User Interface

The Nortec RS humidifier has an interactive touchscreen display which can be used to configure and monitor its operation. Refer to Figure 3.

In addition, the unit can also be configured and monitored remotely using the built-in BMS connectivity (BACnet, Modbus).

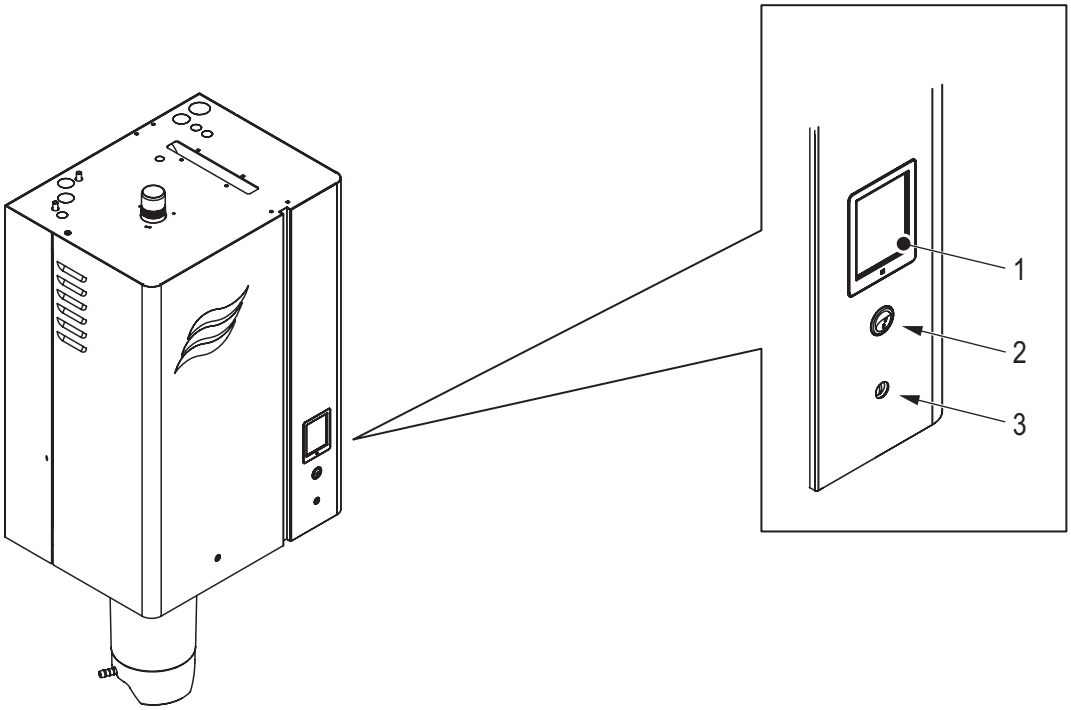

Figure 3: Nortec RS User Interface

1 Touchscreen display – user interface to configure the humidifier, and access status information
2 Status LED – multi-function LED changes color to indicate operating status of the unit
3 On/Off switch – allows user to turn humidifier On/Off

2 Operation

2.1 Functional description

The Nortec RS steam humidifier is an atmospheric steam generator. It operates on the resistance heating principle and is designed for direct room air humidification (with blower pack) and indirect humidification (with steam distributor) in HVAC systems.

Water supply

The water is supplied via an optional external sediment filter to the steam humidifier. It reaches the steam cylinder via the level controlled inlet valve and the fill cup.

Note: the fill cup is designed with an internal 1" air gap, to separate the supply water from the unit water. That means, no unit water can flow back into the supply water line.

Level regulation

The water level in the steam cylinder is continuously monitored with the level unit. If the water level reaches a preset level (due to the evaporation process) the level unit supplies a signal to the controller. This opens the inlet valve and the steam cylinder is filled up. When the preset operating level is reached, the level unit supplies another signal to the controller to close the inlet valve.

The pressure equalizing pipe between the steam connection and the level unit ensures that the water levels are the same in the steam cylinder and the level unit.

Steam generation regulation

The steam is produced in the steam cylinder by several resistive heating elements. An external or the integrated continuous controller control the steam production fully variably from 0 to 100 %.

Alternatively the Nortec RS can be controlled also via an On/Off controller.

Flushing

The evaporation process increases the concentration of minerals in the water of the steam cylinder. A suitable volume of water must be flushed out of the steam cylinder from time to time and replaced by fresh water to ensure that this concentration does not exceed a level unsuitable for operation.

The Nortec RS consists of the following two forms of flushing:

– **Automatic flushing** takes place as soon as the water in the steam cylinder exceeds the upper operating level (e.g. by foaming of the water).
– **Flushing dependent on time** performs the flushing process at preselected time intervals.

Automatic or time-dependent flushing takes place depending on the water quality and the operating data. If the lowest operating level is reached during the flushing process, the inlet valve remains open until the water level in the steam cylinder has reached the normal working level again. If the lowest operating level is not reached, the inlet valve is closed.

Scale collector tank

The minerals precipitated by the evaporation process sink down in the steam cylinder and accumulate in the scale collector tank, thus extending the service intervals and reducing the maintenance work.

Units designed for operation with water from a RO system or with de-ionized water do not require a scale collector tank as RO water and de-ionized water contains only small amounts of minerals.

2.2 Sequence of Operation

The following is a general sequence of operation – the actual sequence may vary depending upon operating conditions and user-configurable parameters. Refer to *Figure 4 on page 14*.

1. When the humidifier receives a valid humidity demand signal, the level unit of the Nortec RS performs a level test.
2. If the water level in the steam cylinder is below the operation level, the fill valve opens and fills the steam cylinder via the fill cup and the fill hose connected to the coupling sleeve at the bottom of the cylinder to the operation level. The humidifier displays the status message “Filling”.
3. As soon as the operation level is reached, the fill valve closes, the main contactor closes and directs power to the resistive heating elements in the steam cylinder(s). The LED lights green and steam is produced after a short delay.
4. As water level in the steam cylinder drops due to evaporation to a certain level, the fill valve opens and refills the water in the steam cylinder to the operating level again.
5. As the humidifier continues to operate:
   a. the water level in the steam cylinder drops due to evaporation. If the level drops to a certain low level, the fill valve opens and refills the water in the steam cylinder to the operating level again.
   b. the concentration of minerals in the water of the steam cylinder increases due to evaporation. To ensure that this concentration does not exceed a level unsuitable for operation, a certain amount of water is flushed out of the steam cylinder from time to time and replaced by fresh water (refer to *"Flushing" on page 12*).
6. The operating sequence loops back to *step 2* and continues steam production as long as there is a valid humidity demand signal.

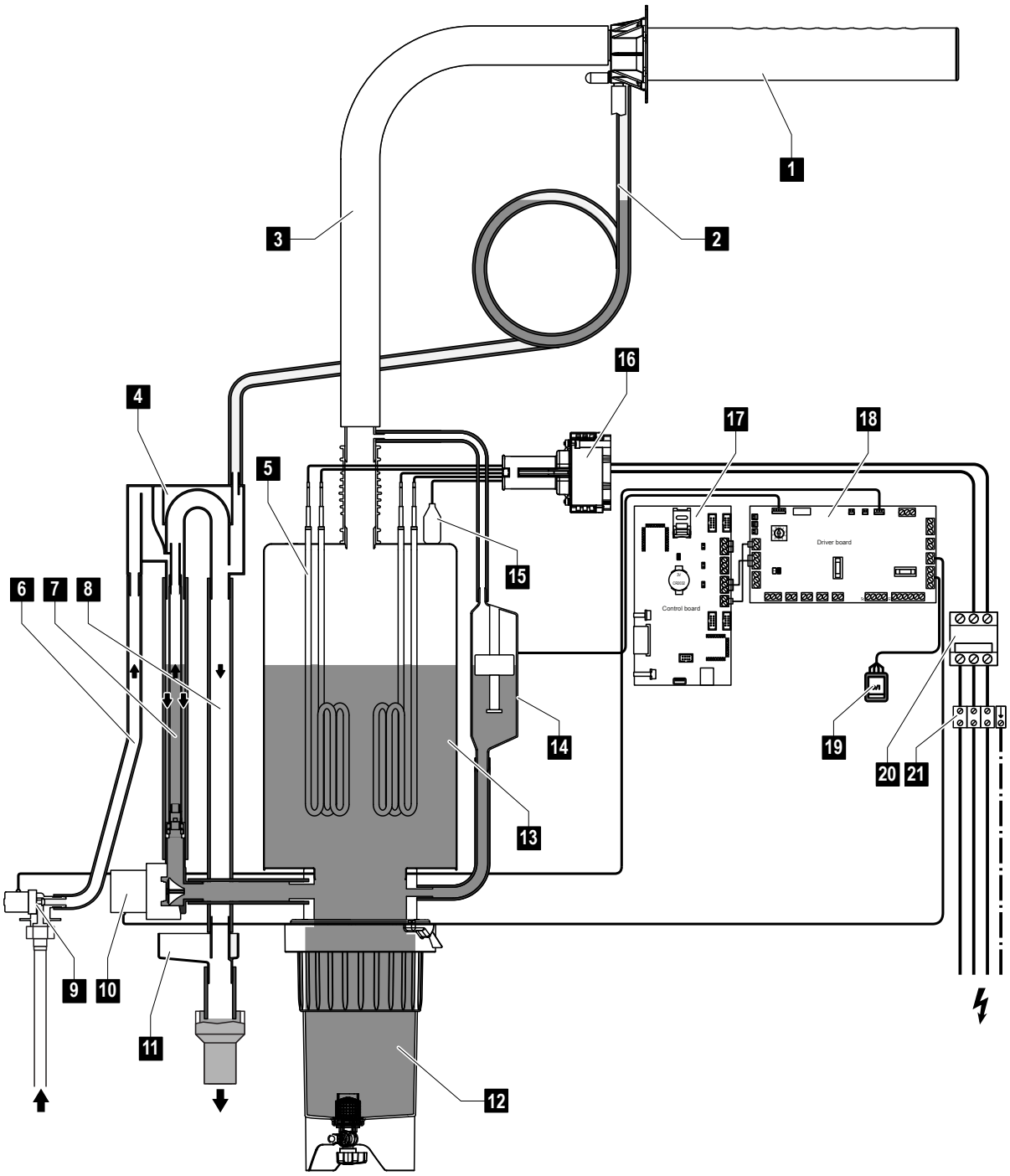

Figure 4: Humidifier Schematic

1 Steam distributor
2 Condensate drain line
3 Steam line
4 Fill cup
5 Resistive heating elements
6 Supply hose
7 Fill and drain hose
8 Overflow hose
9 Fill valve
10 Drain pump
11 Drain canal
12 Lime collector tank
13 Steam cylinder
14 Level unit
15 Excess temperature switch
16 Heating cable plug
17 Control boeard
18 Driver board
19 Unit switch
20 Contactor
21 Supply terminal

2.3 Drain interval time / water consumption

The drain interval time is either calculated automatically by the control software based on the set supply water quality and the water hardness or can be set manually. However the water quality on site must be obtained from the local water supplier.

During a drain cycle, the fill valve is energized to assist in reducing the drain water temperature below 140 °F (60 °C), and at the same time the drain pump is energized. The water consumption of the Nortec RS largely depends on the set drain interval time based on the supply water quality and water hardness (refer to *"Model Specifications" on page 16* for draining rates).

If a heavy scale build up is discovered when servicing the steam cylinder the drain interval time must be reduced. On the other hand if only a light scale build up is discovered the drain interval time can be increased.

3 Product Specifications

3.1 Model Specifications

3.1.1 Model Designation

The specification label on the side (and the underside) of the Nortec RS humidifier shows its model number, serial number and ratings – refer to *"Humidifier Components" on page 7*. The breakdown of the model number is shown in *Figure 5*.

Example:
Nortec RS Space 65 440-480V/3~ P SC

Product designation

Unit model:
Blank= Duct
Space= with blower pack

Steam capacity in lb/hr:

Heating voltage:

208V/1~/50...60Hz: **208V/1~**
240V/1~/50...60Hz: **240V/1~**
440-480V/1~/50...60Hz: **440-480V/1~**
600V/1~/50...60Hz: **600V/1~**
208V/3~/50...60Hz: **208V/3~**
240V/3~/50...60Hz: **240V/3~**
440-480V/3~/50...60Hz: **440-480V/3~**
600V/3~/50...60Hz: **600V/3~**

Control accuracy:
P: high control accuracy

Water management:
SC: with scale collector tank

Figure 5: Model Number Breakdown

3.1.2 Nortec RS Specifications

The Nortec RS humidifier is available in a range of output capacities, voltages and configurations. Refer to *Table 8 on page 17* for the Nortec RS (Duct) specifications, and *Table 9 on page 19* for the Nortec RS Space specifications.

In addition, the short-circuit current rating (SCCR) for all Nortec RS humidifiers is 5 kA.

Table 8: Nortec RS Specifications

Type (Housing size)	Voltage V	Steam Capacity lb/h (kg/h)	Nominal current A	Maximum External Fuse A	Power consump-tion kW	Fill Rate gpm (l/min)	Drain Rate gpm (l/min)	Netweight / Operating Weight lb (kg)
RS 10 (S)	208 V/1~	10.9 (4.9)	17.8	25	3.7	3.7 (14.0)	6.7 (25.4)	60/89 (27/40)
	220-240 V/1~	10.9 (4.9)	15.5	20	3.7			
	440-480 V/1~	9.7 (4.4)	6.9	15	3.3			
	550-600 V/1~	11.4 (5.2)	6.5	15	3.9			
RS 15 (S)	208 V/1~	15.9 (7.2)	26.0	35	5.4			
	220-240 V/1~	14.5 (6.6)	20.6	25	4.9			
	440-480 V/1~	14.1 (6.4)	10.0	15	4.8			
	550-600 V/1~	14.7 (6.7)	8.3	15	5.0			
RS 20 (S)	208 V/1~	21.2 (9.6)	34.7	50	7.2			
	220-240 V/1~	21.2 (9.6)	30.0	40	7.2			
	440-480 V/1~	18.8 (8.5)	13.3	20	6.4			
	550-600 V/1~	19.6 (8.9)	11.1	15	6.7			
RS 30 (M)	208 V/1~	31.8 (14.4)	52.0	70	10.8			89/145 (40/66)
	220-240 V/1~	31.8 (14.4)	45.0	60	10.8			
	440-480 V/1~	31.5 (14.3)	22.3	30	10.7			
	550-600 V/1~	31.4 (14.2)	17.8	25	10.7			
RS 10 (S)	208 V/3~	10.9 (4.9)	10.3	15	3.7	3.7 (14.0)	6.7 (25.4)	60/89 (27/40)
	220-240 V/3~	10.9 (4.9)	8.9	15	3.7			
	440-480 V/3~	11.3 (5.1)	4.6	15	3.8			
	550-600 V/3~	11.1 (5.0)	3.6	15	3.8			
RS 15 (S)	208 V/3~	15.9 (7.2)	15.0	20	5.4			
	220-240 V/3~	14.5 (6.6)	11.9	15	4.9			
	440-480 V/3~	14.6 (6.6)	6.0	15	5.0			
	550-600 V/3~	17.6 (8.0)	5.8	15	6.0			
RS 20 (S)	208 V/3~	21.2 (9.6)	20.0	25	7.2			
	220-240 V/3~	21.2 (9.6)	17.3	25	7.2			
	440-480 V/3~	19.4 (8.8)	7.9	15	6.6			
	550-600 V/3~	22.8 (10.3)	7.4	15	7.7			
RS 30 (M)	208 V/3~	28.8 (13.1)	27.2	35	9.8			89/145 (40/66)
	220-240 V/3~	31.8 (14.4)	26.0	35	10.8			
	440-480 V/3~	31.5 (14.3)	12.9	20	10.7			
	550-600 V/3~	31.4 (14.2)	10.3	15	10.7			
RS 45 (M)	208 V/3~	47.7 (21.6)	45.0	60	16.2			
	220-240 V/3~	47.9 (21.7)	38.7	50	16.1			
	440-480 V/3~	45.2 (20.5)	18.5	25	15.4			
	550-600 V/3~	47.1 (21.4)	15.4	20	16.0			

Table 8: Nortec RS Specifications, continued...

Type (Housing size)	Voltage V	Steam Capacity lb/h (kg/h)	Nominal current A	Maximum External Fuse A	Power consump-tion kW	Fill Rate gpm (l/min)	Drain Rate gpm (l/min)	Netweight / Operating Weight lb (kg)
RS 65 (M)	208 V/3~	71.6 (32.5)	67.5	90	24.3	3.7 (14.0)	6.7 (25.4)	89/145 (40/66)
	220-240 V/3~	71.9 (32.6)	58.0	80	24.1			
	440-480 V/3~	63.0 (28.6)	25.8	35	21.4			
	550-600 V/3~	70.6 (32.0)	23.1	30	24.0			
RS 90 (M)	208 V/3~	94.6 (42.9)	38.7	50	32.1			
	220-240 V/3~	94.3 (42.8)	30.8	40	32.0			
RS 90 (L)	440-480 V/3~	95.4 (43.3)	90.0	125	32.4	2 x 3.7 (2 x 14.0)	2 x 6.7 (2 x 25.4)	178.57 (81.0) 291.01 (132.0)
	550-600 V/3~	94.6 (42.9)	77.4	100	32.2			
RS 130 (L)	208 V/3~	143.2 (65.0)	135.0	175	48.6			
	220-240 V/3~	141.8 (64.3)	116.0	150	48.2			
	440-480 V/3~	126.0 (57.2)	51.6	70	42.8			
	550-600 V/3~	141.2 (64.1)	46.2	60	46.2			
RS 180 (L)	440-480 V/3~	189.2 (85.8)	77.3	100	64.2			
	550-600 V/3~	188.6 (85.5)	61.7	80	64.0			

* Per steam cylinder

Table 9: Nortec RS Space Specifications

Type (Housing size)	Voltage V	Steam Capacity lb/h (kg/h)	Nominal current A	Maximum External Fuse A	Power consump-tion kW	Fill Rate gpm (l/min)	Drain Rate gpm (l/min)	Netweight / Operating Weight lb (kg)
RS 10 (S)	208 V/1~	10.9 (4.9)	17.8	25	3.7	3.7 (14.0)	6.7 (25.4)	98/127 (45/58)
	220-240 V/1~	10.9 (4.9)	15.5	20	3.7			
	440-480 V/1~	9.7 (4.4)	6.9	15	3.3			
	550-600 V/1~	11.4 (5.2)	6.5	15	3.9			
RS 15 (S)	208 V/1~	15.9 (7.2)	26.0	35	5.4			
	220-240 V/1~	14.5 (6.6)	20.6	25	4.9			
	440-480 V/1~	14.1 (6.4)	10.0	15	4.8			
	550-600 V/1~	14.7 (6.7)	8.3	15	5.0			
RS 20 (S)	208 V/1~	21.2 (9.6)	34.7	50	7.2			
	220-240 V/1~	21.2 (9.6)	30.0	40	7.2			
	440-480 V/1~	18.8 (8.5)	13.3	20	6.4			
	550-600 V/1~	19.6 (8.9)	11.1	15	6.7			
RS 30 (M)	208 V/1~	31.8 (14.4)	52.0	70	10.8			127/183 (58/83)
	220-240 V/1~	31.8 (14.4)	45.0	60	10.8			
	440-480 V/1~	31.5 (14.3)	22.3	30	10.7			
	550-600 V/1~	31.4 (14.2)	17.8	25	10.7			
RS 10 (S)	208 V/3~	10.9 (4.9)	10.3	15	3.7	3.7 (14.0)	6.7 (25.4)	98/127 (45/58)
	220-240 V/3~	10.9 (4.9)	8.9	15	3.7			
	440-480 V/3~	11.3 (5.1)	4.6	15	3.8			
	550-600 V/3~	11.1 (5.0)	3.6	15	3.8			
RS 15 (S)	208 V/3~	15.9 (7.2)	15.0	20	5.4			
	220-240 V/3~	14.5 (6.6)	11.9	15	4.9			
	440-480 V/3~	14.6 (6.6)	6.0	15	5.0			
	550-600 V/3~	17.6 (8.0)	5.8	15	6.0			
RS 20 (S)	208 V/3~	21.2 (9.6)	20.0	25	7.2			
	220-240 V/3~	21.2 (9.6)	17.3	25	7.2			
	440-480 V/3~	19.4 (8.8)	7.9	15	6.6			
	550-600 V/3~	22.8 (10.3)	7.4	15	7.7			
RS 30 (M)	208 V/3~	28.8 (13.1)	27.2	35	9.8			127/183 (58/83)
	220-240 V/3~	31.8 (14.4)	26.0	35	10.8			
	440-480 V/3~	31.5 (14.3)	12.9	20	10.7			
	550-600 V/3~	31.4 (14.2)	10.3	15	10.7			
RS 45 (M)	208 V/3~	47.7 (21.6)	45.0	60	16.2			
	220-240 V/3~	47.9 (21.7)	38.7	50	16.1			
	440-480 V/3~	45.2 (20.5)	18.5	25	15.4			
	550-600 V/3~	47.1 (21.4)	15.4	20	16.0			
RS 65 (M)	208 V/3~	71.6 (32.5)	67.5	90	24.3			
	220-240 V/3~	71.9 (32.6)	58.0	80	24.1			
	440-480 V/3~	63.0 (28.6)	25.8	35	21.4			
	550-600 V/3~	70.6 (32.0)	23.1	30	24.0			
RS 90 (M)	440-480 V/3~	94.6 (42.9)	38.7	50	32.1			
	550-600 V/3~	94.3 (42.8)	30.8	40	32.0			

3.2 Specification Drawings

Empty Weight	60 lbs
Full Weight	89 lbs
Front Clearance	36 in.
Ceiling Clearance	16 in.
Left/Right Clearance	0 in.
Floor Clearance	24 in.
Water Inlet Pressure	30-80 psig

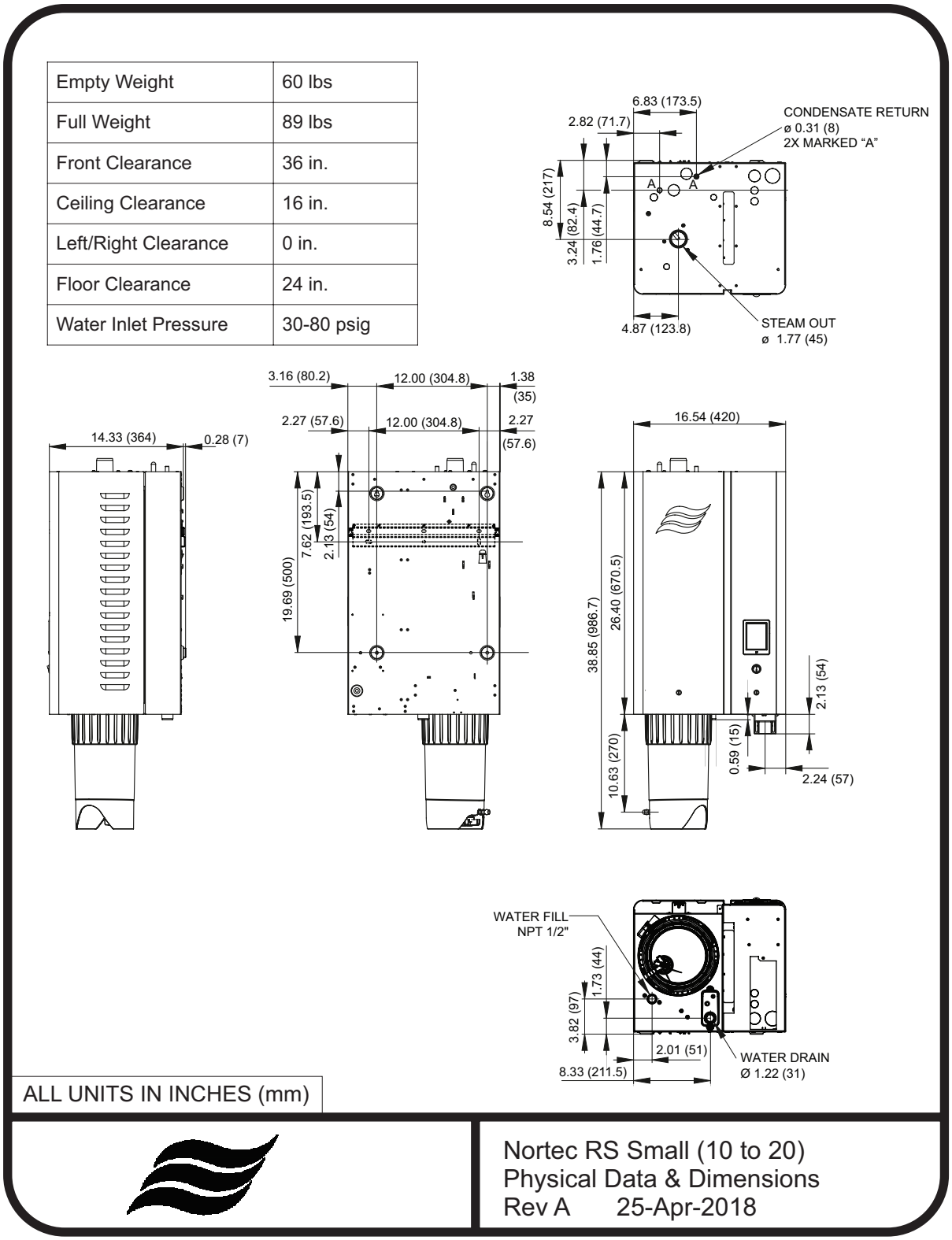

Figure 6: Nortec RS 10 - RS 20 Physical Data and Dimensions

Empty Weight	89 lbs
Full Weight	145 lbs
Front Clearance	36 in.
Ceiling Clearance	16 in.
Left/Right Clearance	0 in.
Floor Clearance	24 in.
Water Inlet Pressure	30-80 psig

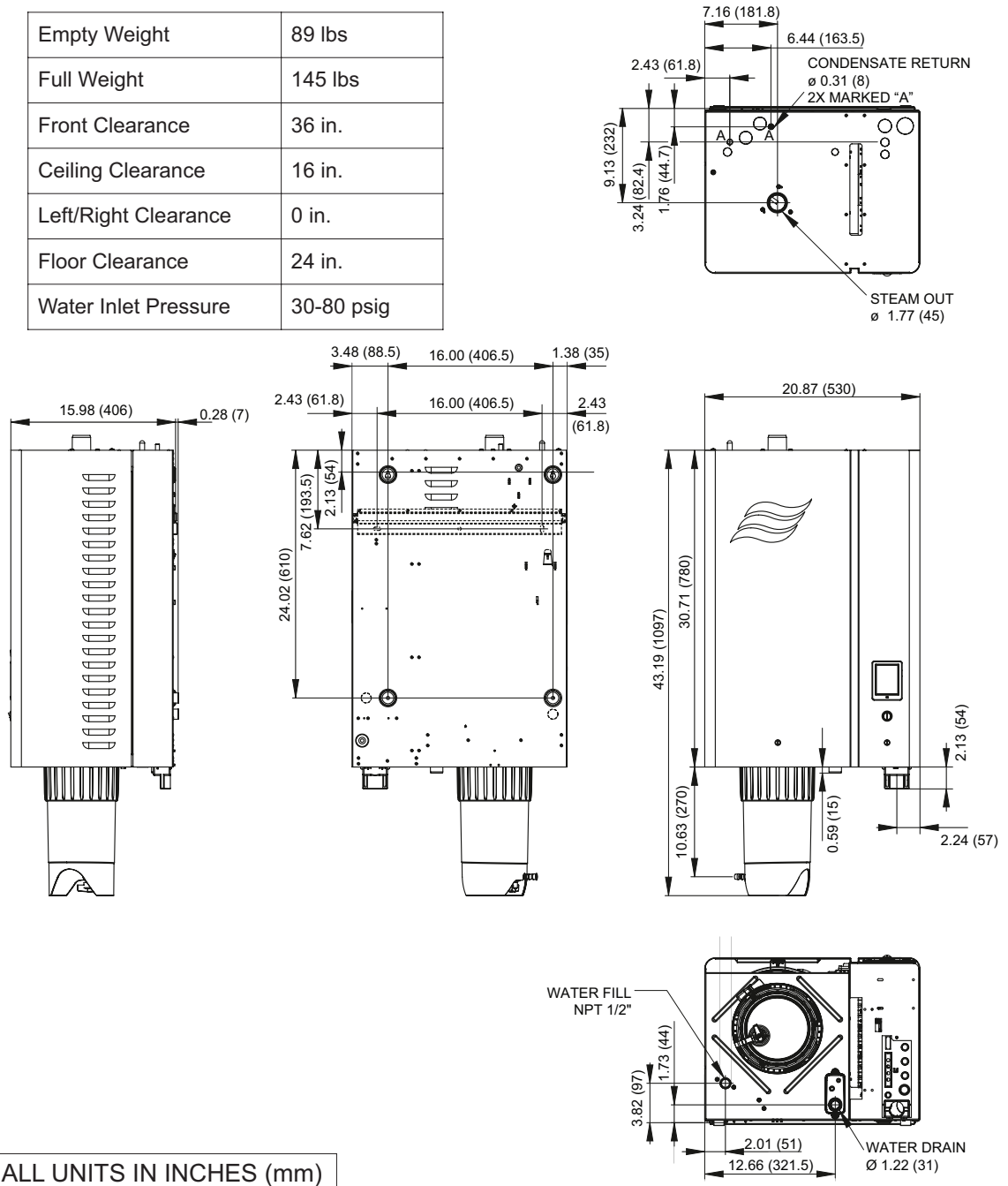

Nortec RS Medium (30 to 90)
Physical Data & Dimensions
Rev A 25-Apr-2018

Figure 7: Nortec RS 30 - RS 90 Physical Data and Dimensions

Empty Weight	179 lbs
Full Weight	291 lbs
Front Clearance	36 in.
Ceiling Clearance	16 in.
Left/Right Clearance	0 in.
Floor Clearance	24 in.
Water Inlet Pressure	30-80 psig

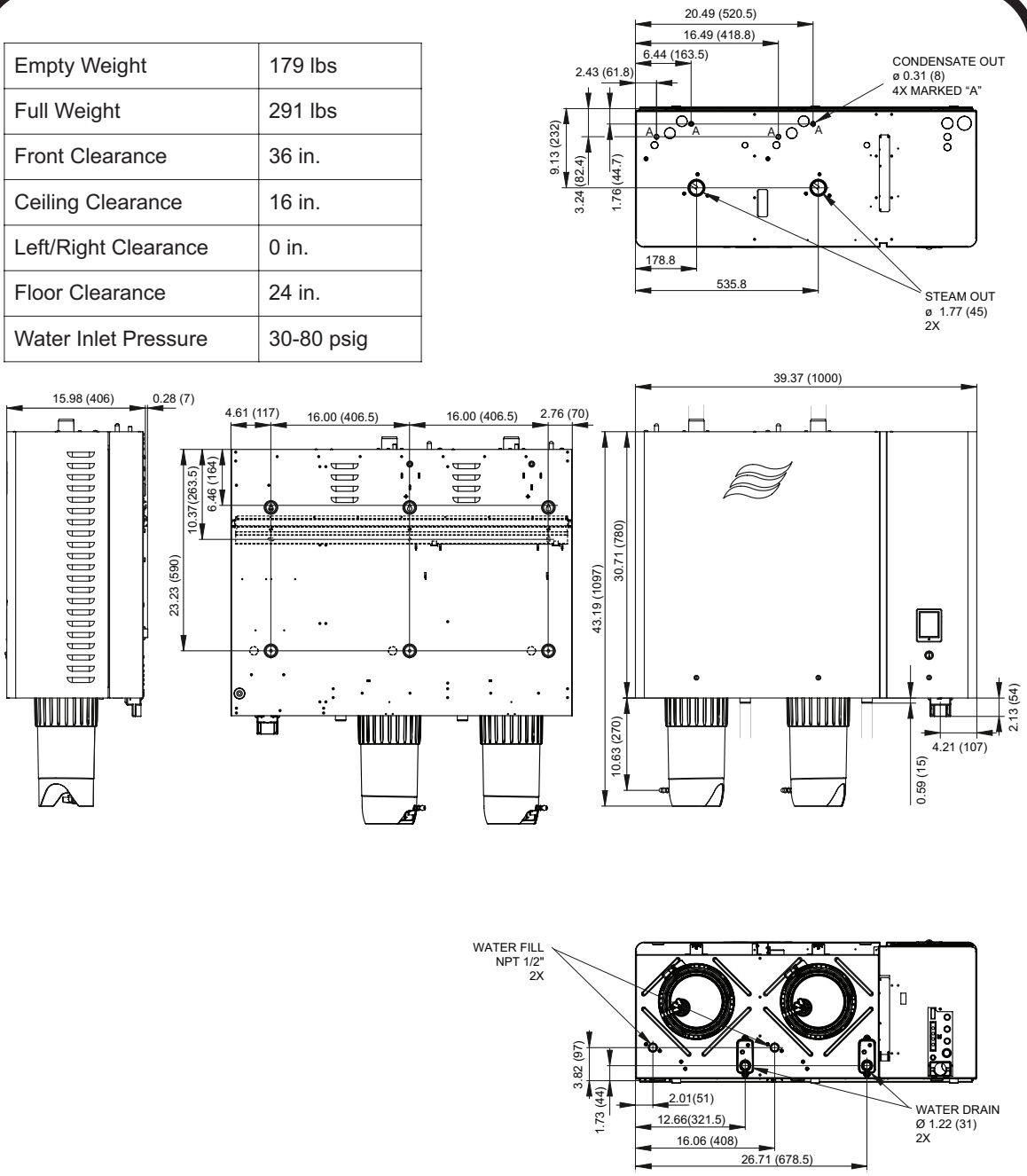

ALL UNITS IN INCHES (mm)

Nortec RS Large (90 to 180)
Physical Data & Dimensions
Rev A 25-Apr-2018

Figure 8: Nortec RS 90 - RS 180 Physical Data and Dimensions

Empty Weight	98 lbs
Full Weight	127 lbs
Front Clearance*	RS 10: 6 in. | RS 15-20: 60 in.
Ceiling Clearance*	12 in.
Left/Right Clearance*	12 in.
Floor Clearance*	86.5 in. to top of blower pack
Water Inlet Pressure	30-80 psig

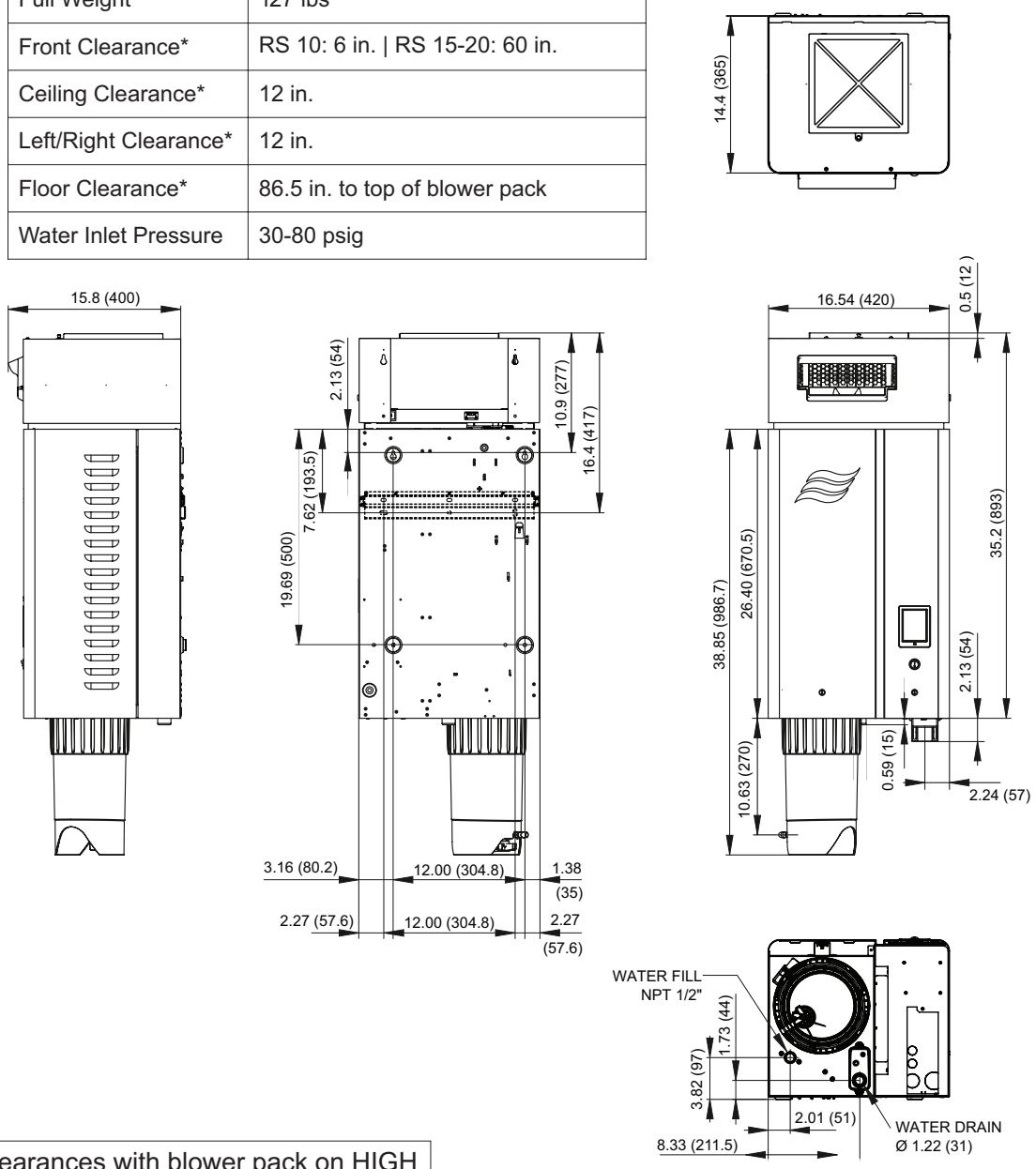

* Clearances with blower pack on HIGH

ALL UNITS IN INCHES (mm)

Nortec EL Small Space (10 to 20)
Physical Data & Dimensions
Rev A 25-Apr-2018

Figure 9: Nortec RS 10 - RS 20 Space Physical Data and Dimensions

Empty Weight	127lbs
Full Weight	183 lbs
Front Clearance*	RS 30: 71 in. | RS 45: 132 in. | RS 65: 153 in. | RS 90: 218 in.
Ceiling Clearance*	12 in.
Left/Right Clearance*	RS 10-45: 12 in. | RS 65-90: 30 in.
Floor Clearance*	96 in. (to bottom of blower pack)
Water Inlet Pressure	30-80 psig

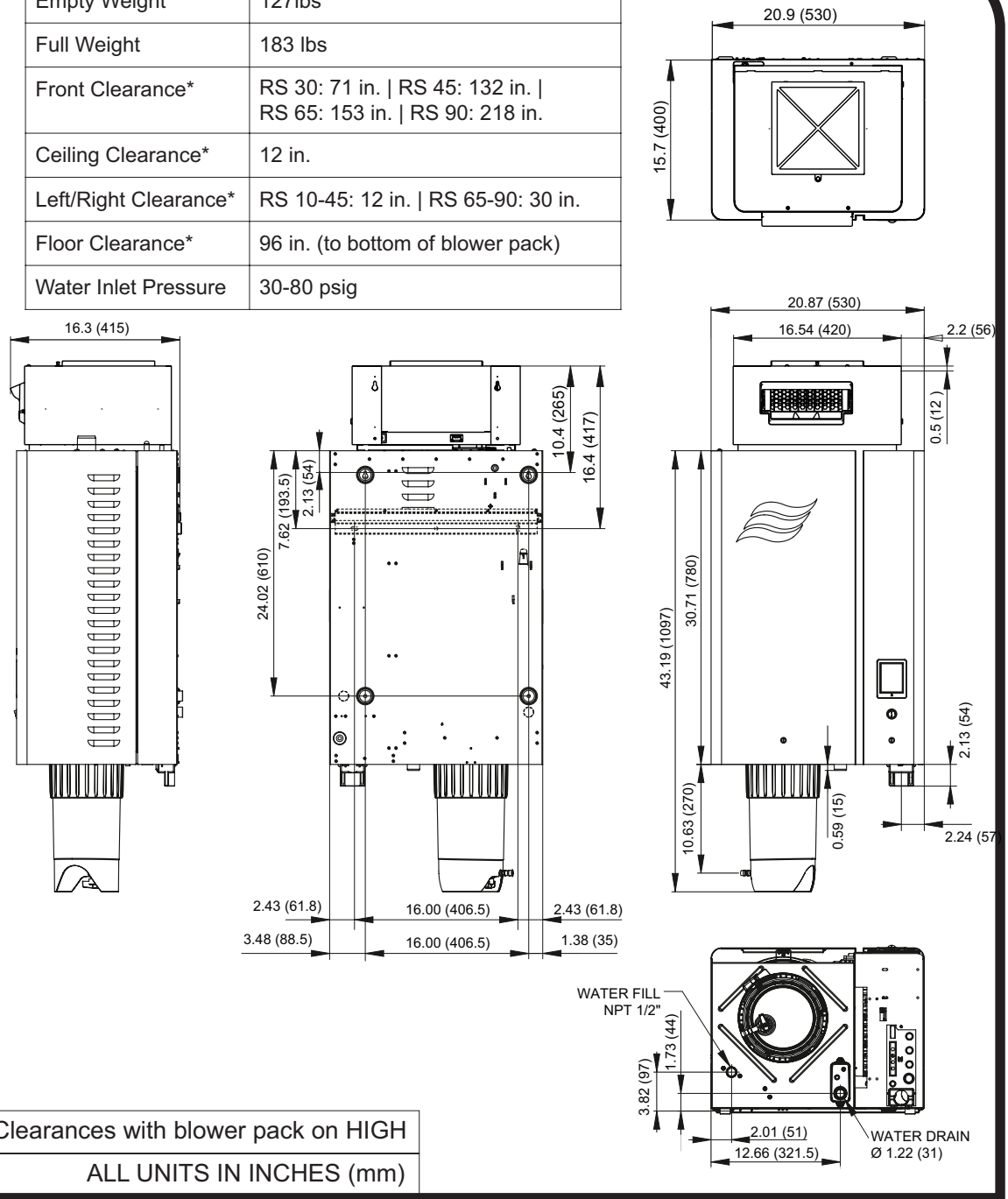

* Clearances with blower pack on HIGH

ALL UNITS IN INCHES (mm)

Nortec RS Medium Space (30 to 90)
Physical Data & Dimensions
Rev A 25-Apr-2018

Figure 10: Nortec RS 30 - RS 65 Space Physical Data and Dimensions

4 Planning

This chapter contains planning information for selecting the location, as well as provisioning of services for the Nortec RS humidifier. It also describes the installation requirements for mounting, plumbing, electrical and steam connections. Design of the control systems and preventative maintenance for the Nortec RS humidifier are also discussed.

4.1 Location and Clearances

- ☐ When selecting the location of the humidifier, choose a location that is close as possible to the steam distributor. This will minimize heat loss through the steam line. Locate the humidifier below the steam distributor, when possible.
- ☐ Allow adequate clearances around the humidifier for ease of maintenance. Although the Nortec RS humidifier requires no side clearance, Condair recommends minimum clearances of 6 in (150 mm) on the side. A clearance of 24 in (610 mm) between the humidifier and the ground is also required. Refer to *Figure 11* and *Table 10 on page 26*, which also show the clearances required for the Nortec RS Space unit. Observe all local and national installation codes. Condair is not responsible for any installation code violations.

  Refer to the Blower Pack Installation, Operation and maintenance Manual (Condair document 2582277) for clearances required for remote-mounted blower packs. All Condair documents are available from *www.condair.com*.
- ☐ The selected location should permit proper routing of services, as well as steam and condensate lines.
- ☐ The Nortec RS humidifier should only be installed in a drip-proof location within buildings, where the ambient temperature is 41-104 °F (5-40 °C) and the relative humidity is 5-95% (non-condensing).

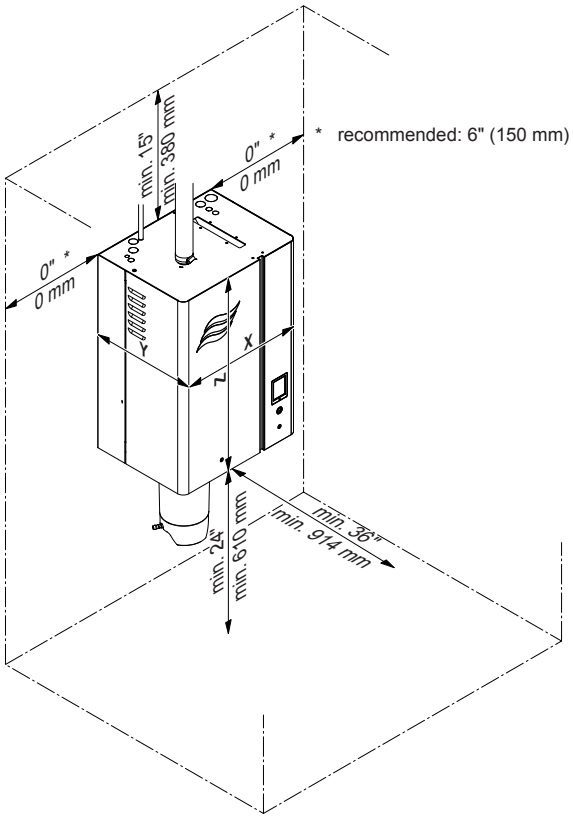

Figure 11: Clearances Nortec RS

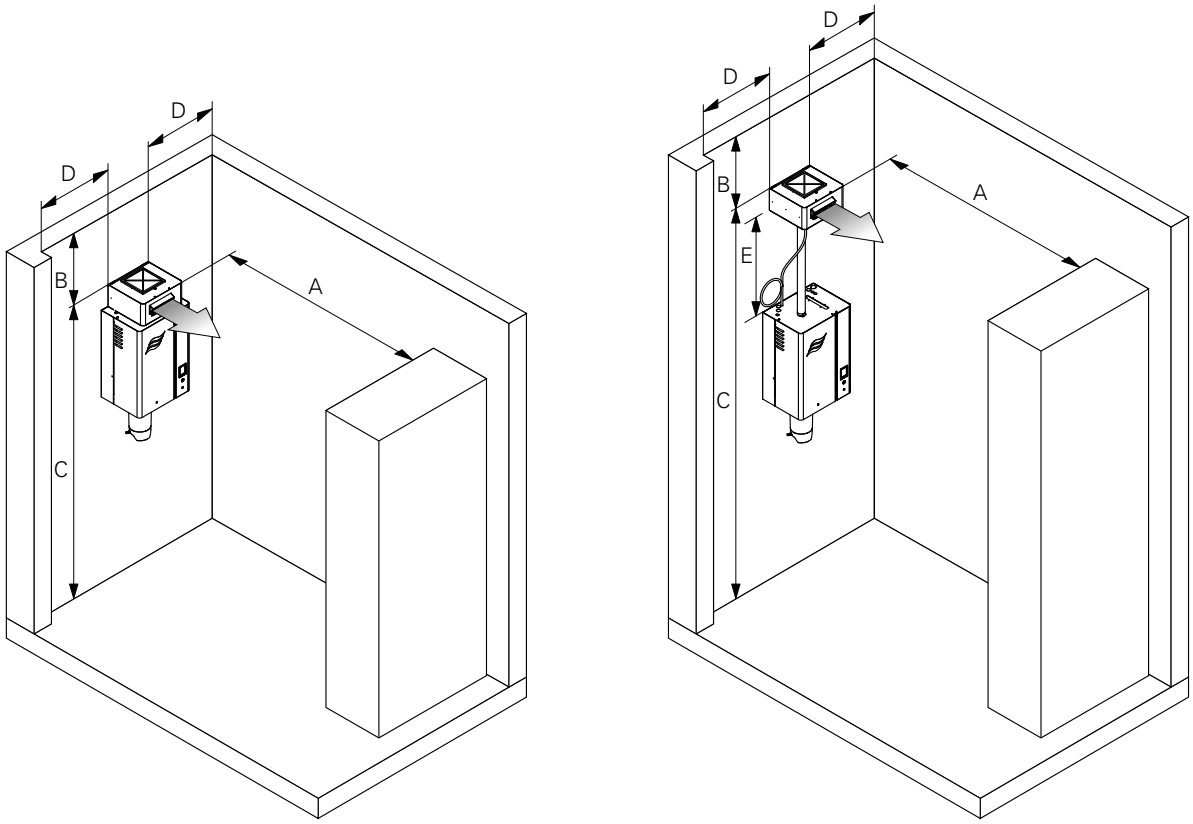

Figure 12: Clearances Nortec RS

Table 10: Minimum Clearances for Blower Packs

Steam Capacity lb/h (kg/h)	Blower Pack Speed Setting	Min. Frontal Clearance – "A" in (m)	Min. Overhead Clearance – "B" in (m)	Min. Height Above Ground – "C" in (m)	Suggested Left Side Clearance – "D" in (m)	Suggested Right Side Clearance – "D" in (m)
10 (4.5)	Low	9 (0.23)	12 (0.31)	90 (2.3)	12 (0.31)	
	High	6 (0.16)	12 (0.31)			
15 (6.8)	Low	18 (0.46)	12 (0.31)			
	High	6 (0.16)	12 (0.31)			
20 (9.0)	Low	75 (1.91)	12 (0.31)			
	High	60 (1.53)	12 (0.31)			
30 (13.5)	Low	86 (2.19)	12 (0.31)			
	High	71 (1.81)	12 (0.31)			
45 (20.5)	Low	174 (4.42)	12 (0.31)			
	High	132 (3.36)	12 (0.31)			
65 (30.0)	Low	189 (4.81)	48 (1.22)		30 (0.77)	
	High	153 (3.89)	12 (0.31)			
90 (40.0)	Low	248 (6.30)	84 (2.14)			
	High	218 (5.54)	12 (0.31)			

Data based upon nominal conditions 72 °F (22 °C), 40% RH.

Note: The High speed setting on the blower pack permits shorter absorption distances, whereas the Low setting permits the blower to run quieter but requires longer absorption distances. Visit www.na.condairhelp.com and use the free Condair online program - Humidifier Engineering and Load-sizing Program (H.E.L.P.) to assist with absorption distance and other calculations.

4.2 Services

Water Supply

- ☐ Water supply to the humidifier must be cold potable drinking water, reverse osmosis (RO) or deionized (DI) water.
- ☐ The water supply should also be free of additives such as corrosion inhibitors, disinfectants, etc., which may affect the performance of the humidifier.
- ☐ The water supply should have a minimum flow rate of 3.7 gal/min (14 l/min) per cylinder.
- ☐ The admissible mains pressure must be 30 ... 80 psi (2.0 ... 5.5 bar) (ham hammer-free system). For mains pressures >80.0 psi (>5.5 bar), the connection must be made via a pressure reducing valve (adjusted to 30.0 psi (2.0 bar). For mains pressures <30.0 psi (<2.0 bar) please contact your Condair supplier.
- ☐ Water temperature should be 33.8 ... 77.0 °F (1...25 °C).
- ☐ The water supply should be filtered to 5 µm (optional, but recommended).
- ☐ The inner diameter of the water supply piping should be ø1/2 in (ø12 mm), and must have a 1/2 in NPT female end.
- ☐ The water supply line should be made of copper, stainless steel or plastic certified for drinking water systems.
- ☐ A shutoff valve and a union fitting must be supplied in the water supply line for ease of maintenance.

Drainage

- ☐ The humidifier should be connected to a dedicated building drain (recommended) with a minimum drainage rate of 6.7 gal/min per cylinder. For safety reasons, drain water from the humidifier should not empty into a sink used by personnel. The drain line must allow free and easy draining. A restricted drain can cause water in the humidifier to over-concentrate and cause water to back up at the air gap funnel. Refer to *"Water and Drainage Connections" on page 30*.
- ☐ The building drain pipe should be made of either copper or stainless steel (minimum DIN 1.4301) so it can handle drain water temperatures up to 212 °F (100 °C).
- ☐ The space in which the humidifier is to be installed should have a floor drain. However, if a floor drain is not available, a leakage monitoring device must be supplied to permit interruption of the water supply in case of a leakage.

Power Supply

- ☐ The power supply to the humidifier should match the full voltage and current draw listed in the specifications. Refer to *Table 8 on page 17* for the Nortec RS power requirements, and *Table 9 on page 19* for the Nortec RS Space power requirements.
- ☐ The power supply must have an external dedicated fused disconnect switch. The fusing must not exceed the maximum circuit protection listed in the tables referenced above.

4.3 Installation Requirements

4.3.1 Humidifier Mounting

The Nortec RS humidifier can be mounted on a wall or equivalent support using the keyholes on the back of the unit. 1/4×2 lag bolts are used to secure the unit to 2×4 studs in the wall (or equivalent support). Refer to *Figure 13*.

The unit can also be mounted on the wall (or equivalent support) using the optional mounting bar. Refer to the Nortec RS Installation Manual (Condair document 2582302 available from *www.condair.com*) for other mounting details.

The following is a list of installation requirements for mounting the Nortec RS humidifier:

- ☐ The humidifier should not be mounted on hot surfaces, or surfaces that can freeze, or near vibrating components, or on the floor. The Nortec RS Space units should not be installed near cold surfaces or where the dew point may be reached.
- ☐ The mounting surface must be able to withstand temperatures of 140-158 °F (60-70 °C) that can be generated during operation of the humidifier.
- ☐ The humidifier should be mounted on a wall or other suitable vertical surface that offers a sufficiently high load-bearing capacity to support the full operating weight of the humidifier and accessories. Refer to *Table 8 on page 17* for the full weights of Nortec RS units, and *Table 9 on page 19* for the Nortec RS Space units.
- ☐ The humidifier should not be used as a structural member. All piping connected to the unit must be supported independently.
- ☐ The Nortec RS must not be mounted to hot or very cold walls or near vibrating components.

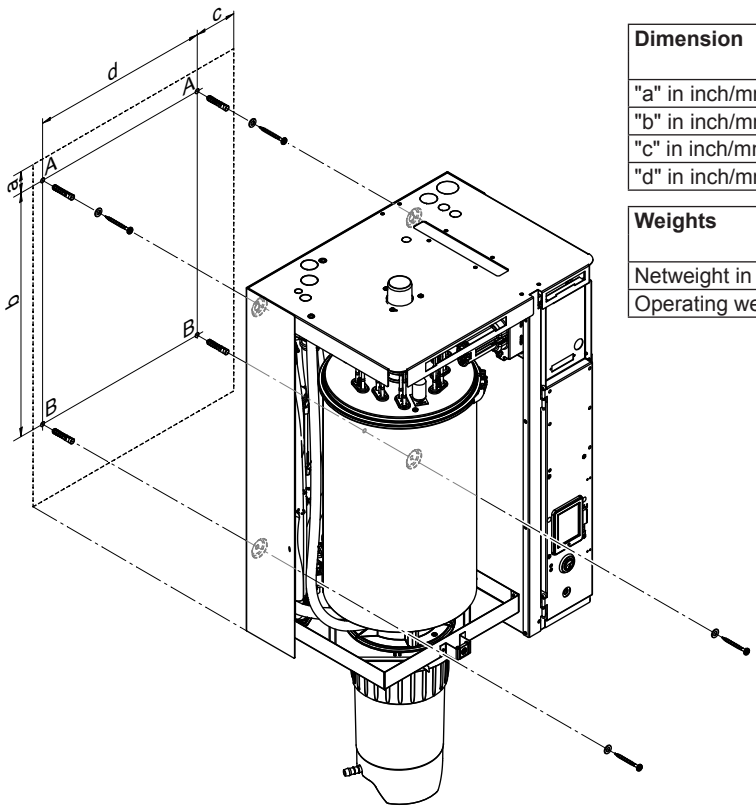

Dimension	Housing size	
	Small	Medium
"a" in inch/mm	2.13" (54.0)	2.13" (54.0)
"b" in inch/mm	17.56" (446.0)	21.89" (556.0)
"c" in inch/mm	3.16" (80.2)	3.49" (88.6)
"d" in inch/mm	12.00" (304.8)	16.00" (406.4)

Weights	Housing size	
	Small	Medium
Netweight in lbs/kg	59.97 / 27.2	88.85 / 40.3
Operating weight in lbs/kg	88.83 / 40.2	145.06 / 65.8

Figure 13: Standard Humidifier Mounting - small and medium size units

Dimension	Housing size Large
"a" in inch/mm	6.46" (164.0)
"b" in inch/mm	16.77" (426.0)
"c" in inch/mm	4.61" (117.2)
"d" in inch/mm	16.00" (406.4)

Weights	Housing size Large
Netweight in lbs/kg	178.57 (81.0)
Operating weight in lbs/kg	291.01 (132.0)

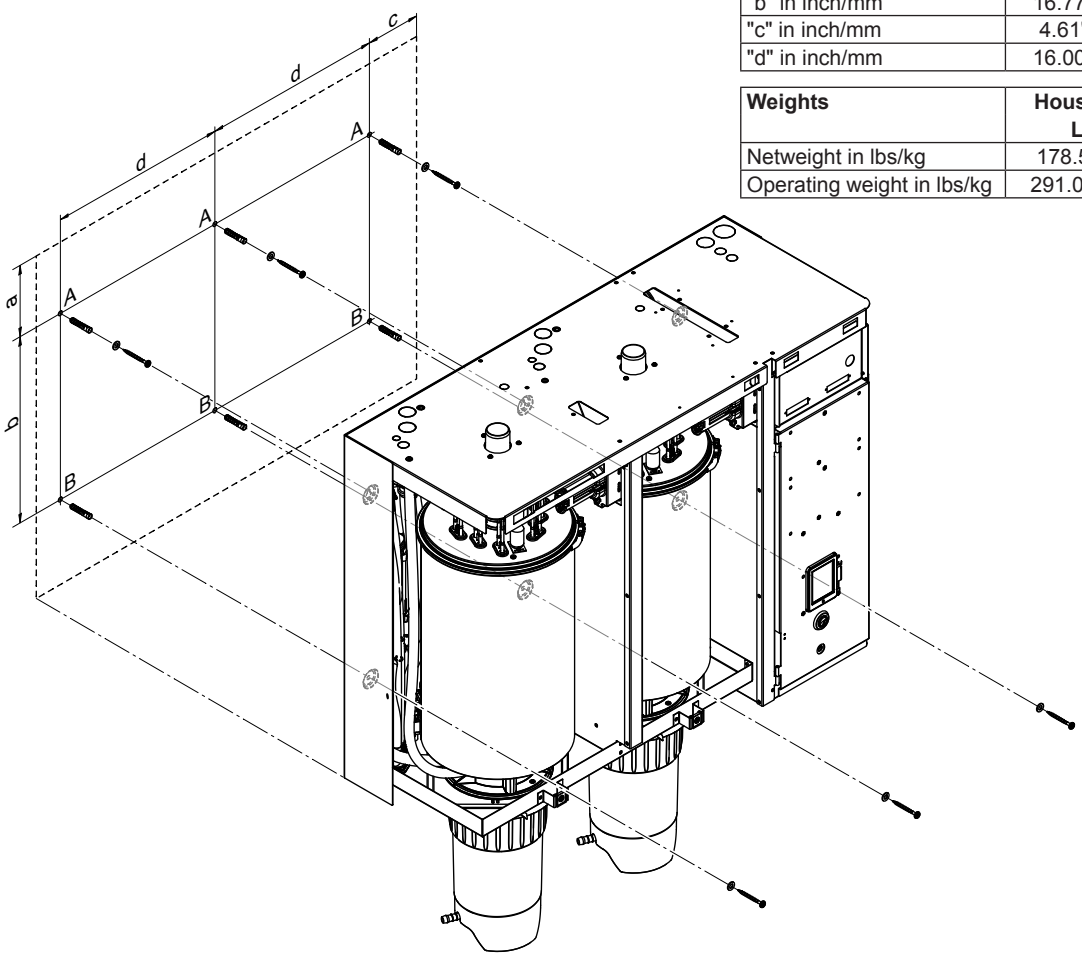

Figure 14: Standard Humidifier Mounting - large size units

4.3.2 Water and Drainage Connections

The water and drain connections on the Nortec RS humidifier are located at the bottom of the unit. Refer to *Figure 15* and *Figure 16*.

The flexible bent hose (supplied) connects a short length of 7/8 in (22 mm) drain line to the drain cup on the humidifier. The drain hose then empties into an air gap funnel connected to the building drain.

The water supply line connects to the fill valve through a NPT-to-BSPP adaptor (supplied).

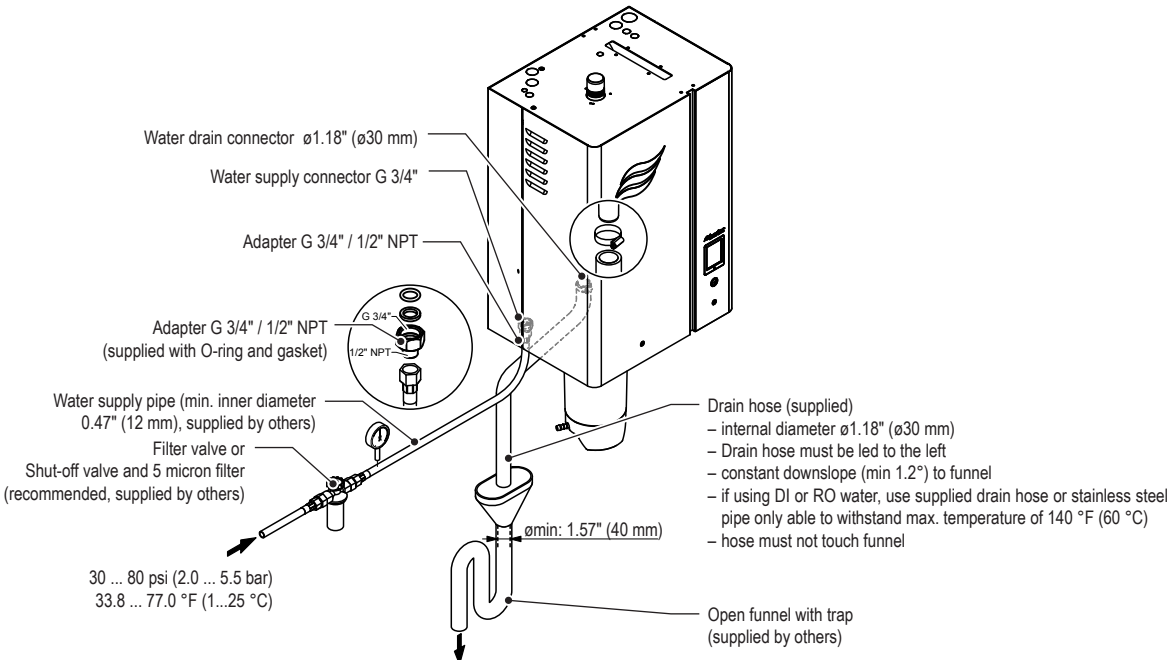

Figure 15: Overview water installation for single units Small ("S") and Medium ("M")

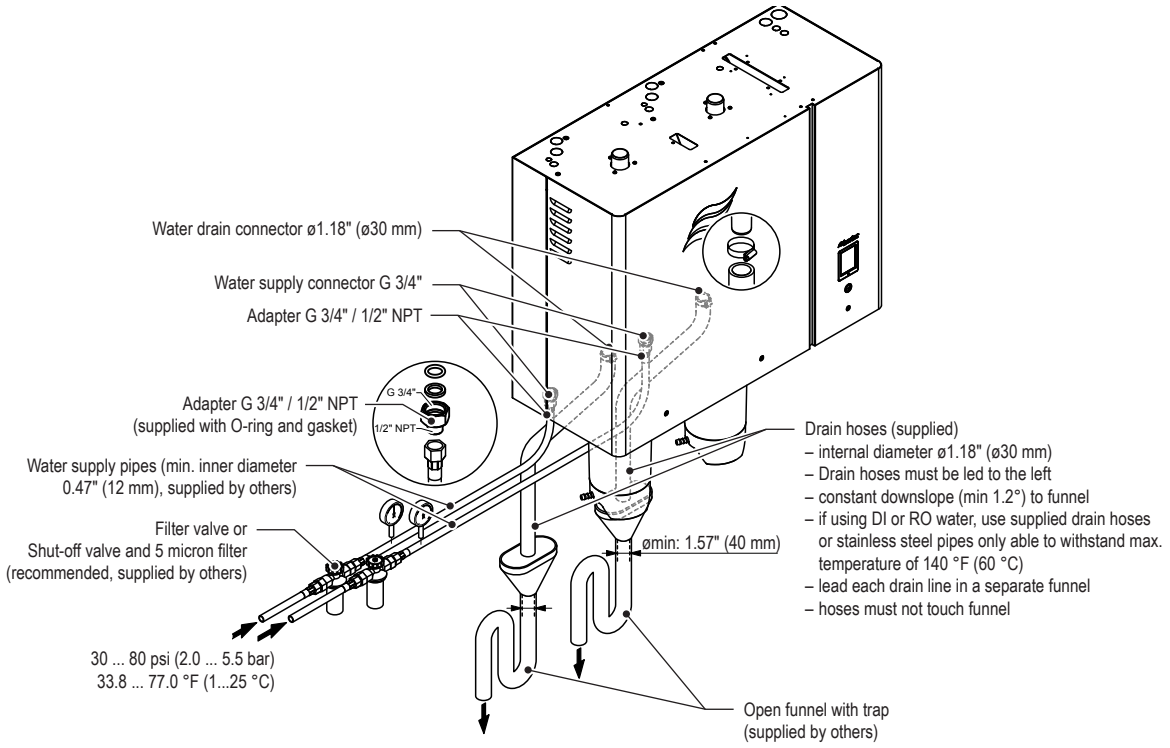

Figure 16: Overview water installation for single units Large ("L")

The following is a list of installation requirements for the water and drainage connections:

- ☐ The drain line from the humidifier should be as short as possible, and empty into an air gap funnel (with optional trap) before connecting to the building drain.
- ☐ The drain line should have a constant minimum downslope of 1.2° to the air gap funnel without touching its sides or bottom.
- ☐ The drain line should have a minimum inner diameter of 1.57" (40 mm), and must be made of stainless steel, or copper pipe to handle temperatures up to 212 °F (100 °C).
- ☐ The air gap funnel should be located away from the humidifier control cabinet to prevent rising steam from damaging the electrical components in the cabinet.
- ☐ Drain lines from large humidifiers with dual steam cylinders must empty into separate air gap funnels before connecting to the drain. The combined drain line should have a minimum inner diameter of 1.57" (40 mm).
- ☐ All water supply and drain connections must be installed to local plumbing codes.

4.3.3 Steam Distribution

The steam generated by the Nortec RS humidifier can be distributed into the conditioned environment by duct distributors installed on air handling units or within supply ducts, or through built-on blower packs (Nortec RS Space humidifier) or remote-mounted blower packs. In all cases, the steam distributors must have a dispersal capacity equal to or greater than the humidifier steam output.

Visit www.na.condairhelp.com and use the free Condair online program - **H**umidifier **E**ngineering and **L**oad-sizing **P**rogram (H.E.L.P.) to assist you with absorption distance calculations, selection of humidifiers, steam distributors, controls and accessories.

Additional information on the effects of humidity, relative humidity calculations, load calculations, and recommended design conditions can be found in the Condair Humidification Load Calculation Manual (Condair document 2553856).

4.3.3.1 Duct Distributors

A variety of duct distributors are available for the Nortec RS humidifier to accomodate duct dimensions, humidifier capacities and steam absorption distances. For more information on available duct distributor systems refer to the documents listed in Table 11, which are available from www.condair.com.

Table 11: Duct Distributor Models

Model	Steam Capacity lb/h (kg/h)	Duct Dimensions in (mm)		Condair Document Number
		Minimum**	Maximum**	
ASD Tube	0-25* (0-11)	10 (255)	66 (1675)	2556592
BSD Tube	0-35 (0-16)	12 (305)	102 (2590)	
CSD Tube	0-115 (0-52)	24 (610)	138 (3503)	
SAM-e	Maximum 1200** (545)**	18×18 W (457×457 W)	360×360 W (9145×9145 W)	1503529
Mini SAM-e	Maximum 210** (95)**	8×12 W (203×305 W)	36x36 W (914×914 W)	

* Max 22 lb/h (10 kg/h) for 10 in (255 mm) ASD tubes.
** Available in various standardized configurations.

The following is a list of installation requirements for duct distributors to ensure steam is properly absorbed, and condensation does not occur in the ducts:

- ☐ Steam distribution capacity must be equal to or greater than the humidifier steam production capacity, less steam line condensate losses. Multiple distributors can be utilized, as needed.
- ☐ Air flow in the duct across the distributor must be laminar over the entire calculated absorption distance downstream of the distributor. Excessive turbulence may cause air stream collisions with internal duct walls/components, which must be avoided.
- ☐ The air velocity in the duct must be greater than 300 ft/min (92 m/min) to prevent steam migrating to, and colliding with, the duct ceiling.
- ☐ An air proving switch and high limit humidistat must be installed in the system. Refer to *"Duct Distribution Control Design" on page 43*.
- ☐ Backpressure in the steam line combined with duct static pressure should not exceed exceed 5.5 in H_2O (1.37 kPa), or up to 10 in H_2O (2.49 kPa) with the optional fill cup extension.
- ☐ The atmospheric steam lines between the Nortec RS humidifier and the steam distributor must be installed as described in *"Atmospheric Steam and Condensate Lines" on page 34*.

4.3.3.2 Blower Packs

Condair blower packs create an air stream to allow absorption of the atmospheric steam in the conditioned environment. Once the steam is absorbed, the humidity will disperse evenly throughout most conditioned environments without the need of further mechanical assistance (except when mechanical obstructions, localized variances in temperature, infiltrating air, or materials that have equalizing moisture effects on the surrounding atmosphere are present). Refer to *"Space Distribution Control Design" on page 45*.

The Nortec RS Space humidifier comes fully factory-assembled with its own built-on blower pack (with internal power supply, steam and condensate connections). The remote-mounted blower pack is capable of dispersing 5-100 lb/h (2-45 kg/h) of steam, and requires an external 120 VAC, 15 A power supply, as well as atmospheric steam line and condensate connections. Refer to *Figure 17*.

The blower pack has two speed settings – High speed setting which provides shorter absorption distances, and the Low speed setting which offers quieter operation but requires longer absorption distance.

For more information refer to the Blower Pack Installation Operation and Maintenance Manual (Condair document 2582277, available from *www.condair.com*).

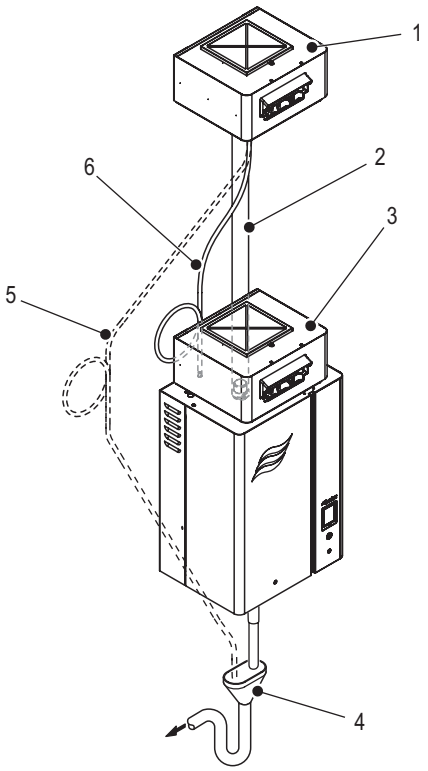

Figure 17: Condair Blower Pack

1 Remote-mounted blower pack
2 Steam line – must rise straight up 12 in (300 mm) before any bends
3 Built-on (Space) blower pack
4 Air gap funnel connected to building drain
5 Condensate line (alternate) with trap for remote-mounted blower pack routed to building drain
6 Condensate line with trap for remote-mounted blower pack connected to humidifier fill cup

The following is a list of requirements for installing remote-mounted blower packs:

- ☐ The atmospheric steam line must rise straight up 12 in (300 mm) from the Nortec RS humidifier before continuing on to the blower pack. Other steam line installation requirements are described in *"Atmospheric Steam and Condensate Lines" on page 34*.
- ☐ The condensate line from the blower pack can be routed to either an external drain or the humidifier fill cup. It must have a constant minimum downslope of 1.2°, with no restrictions. The condensate trap should have a diameter of 6 in (150 mm) and must be located minimum 12 in (300 mm) below the blower pack condensate port.

4.3.3.3 Atmospheric Steam and Condensate Lines

The Nortec RS humidifier can handle backpressures up to 5.5 inches of water column (1.37 kPa), or up to 10 inches of water column (2.49 kPa) with the optional fill cup extension. When the combined effect of backpressure in the steam line and the duct static pressure exceed this limit, it can adversely affect operation of the humidifier. The steam line material, its diameter, length, slope and the number of bends in the line affect the backpressure, which must be considered carefully when planning. Other factors such as insulation of the steam line to reduce efficiency losses caused by the formation of condensate, as well as condensate drainage to permit free venting of steam must also be considered.

The following is an overview of the requirements for atmospheric steam and condensate lines. For more details refer to “Best Practices for Installing Steam and Condensate Lines” in the Nortec RS Installation Manual (Condair document 2582302).

Steam Lines

- ☐ Steam lines must be made of copper (MED Type-L) or stainless steel (minimum DIN 1.4301) exclusively. Use a Condair-supplied steam hose for short distances only. Steam lines made of any other materials may adversely affect operation of the unit.
- ☐ The length of the steam line and the number of bends in the line should be kept to a minimum to minimize backpressure and reduce efficiency loss. The maximum recommended length of steam line is listed in *Table 12 on page 35*.

  Refer to *Table 13 on page 35* for equivalent length of some common fittings when calculating total equivalent length of the steam lines. Also refer to *"Condensate Loss" on page 53* when calculating efficiency losses based on total equivalent length of the steam line.
- ☐ The steam line should not have any restrictions, as it can increase backpressure. Backpressure in the line combined with duct static pressure should not exceed 5.5 inches of water column (1.37 kPa), or up to 10 inches of water column (2.49 kPa) with the optional fill cup extension.
- ☐ Steam lines (from Nortec RS 90L/130/180 with dual steam cylinders or multiple humidifiers) should not merge except at the steam distributor, and ONLY if the steam cylinders operate in parallel mode. Refer to*"Combining Steam Lines" on page 37*.
- ☐ The steam line should be connected to the steam outlet on the humidifier and the steam distributor with short lengths of Condair steam hose, and secured with hose clamps.
- ☐ The steam line must be supported independently so there is no load on the humidifier.
- ☐ The steam line must have a constant minimum upslope of 10°, or a constant minimum downslope of 2°, as shown in *Figure 18*.
- ☐ The steam line must be insulated with a minimum of 1 in (25 mm) pipe insulation over its entire length to minimize the formation of condensate.
- ☐ Steam line should be properly supported to prevent sagging. If necessary mount condensate drain at lowest points.

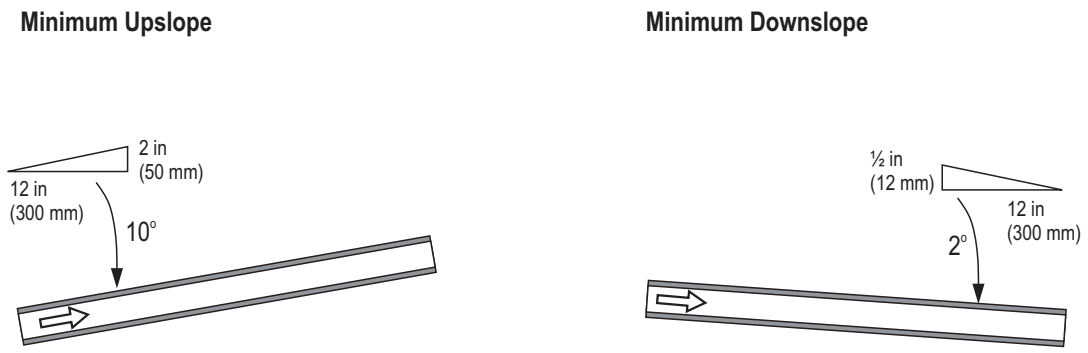

Figure 18: Steam Line Slope

Table 12: Steam Line Recommendations

Model (Unit size)	Steam Line			Over-sized Steam Line**			Steam Losses***
	Equivalent Maximum Steam Line Length	Copper Pipe (MED Type-L) Diameter	Stainless Steel (min. DIN 1.4301) Pipe Diameter	Equivalent Maximum Steam Line Length	Copper Pipe (MED Type-L) Diameter	Stainless Steel (min. DIN 1.4301) Pipe Diameter	
RS 10 (S)	7 ft (2 m)	1-1/2 in (40 mm) 1-1/2 in (40 mm)	1-3/4 in × 0.065 wall (45 mm × 1.65 mm wall)	14 ft (4 m)	2 in (50 mm)	2 in × 0.065 wall (50 mm × 1.65 mm wall)	0.06 lb/h/ft (0.09 kg/h/m)
RS 15 (S)	12 ft (3.5 m)			24 ft (7 m)			
RS 20 (S)	17 ft (5 m)			34 ft (10 m)			
RS 30 (M)	22 ft (6.5 m)			44 ft (13 m)			
RS 45 (M)	43 ft (13 m)			86 ft (26 m)			0.11 lb/h/ft (0.18 kg/h/m)
RS 65 (M) RS 90 (M)	47 ft (14 m)			94 ft (28 m)			
RS 90 * (L)	43 ft (13 m)			86 ft (26 m)			
RS 130 * (L) RS 180 * (L)	50 ft (15 m)			100 ft (30 m)			
Condair Steam Hose							
RS 10-RS 180	10 ft (3 m)	P/N 1328820 – 1-3/4 in (45 mm)					0.15 lb/h/ft (0.22 kg/h/m)

* Use a single steam line for each steam cylinder. Do not combine lines except at a distributor, and only if using the humidifiers in parallel mode.

** Over-sized lines may require a reducer at the humidifier and the steam distributor.

*** Based on 1 in (25 mm) insulated copper pipe.

Table 13: Approximate Equivalent Length of Atmospheric Steam Line Fittings

Nominal Tube Size in (mm)	Standard 90° Elbow ft (m)	45° Elbow ft (m)	Side-outlet Tee ft (m)
0.75-0.875 (19-22)	2 (0.6)	1 (0.3)	4 (1.2)
1.5-1.75 (38-45)	3.5 (1.1)	1.75 (0.5)	7 (2.1)
3 (76)	5 (1.5)	2.5 (0.8)	11 (3.4)
4 (102)	8 (2.4)	4 (1.2)	15 (4.6)

Condensate Lines

- ☐ Condensate line and trap must be made of 1/4 in copper (MED Type-L) or 3/8 in stainless steel (minimum DIN 1.4301), or 3/8 in (9.5 mm) Condair condensate hose.
- ☐ Condensate lines must connect into full size "Tee" fittings in the steam line. Refer to *Figure 19*.
- ☐ Condensate lines must be installed at all low points in the steam line, and at horizontal-to-vertical transitions in the steam line.
- ☐ Condensate lines and traps must be installed at regular intervals on long steam runs, and the maximum distance between condensate lines is 15 ft (4.5 m). Refer to *Figure 20 on page 37*.
- ☐ The condensate trap must be located a minimum of 12 in (300 mm) below the condensate port on the steam distributor or the "Tee" fitting in the steam line. The trap diameter should be 8 in (200 mm).
- ☐ The condensate drain line must have a constant minimum downslope of 1.2°, and may be connected to the fill cup port on the top of the humidifier, or to the building drain.

  Condensate from a SAM-e steam distributor or larger steam line should be connected to a drain water cooler (if required by code) before emptying into the building drain.

  Large volumes of condensate from multiple humidifiers or SAM-e systems should never be returned to a single humidifier.
- ☐ For safety reasons, condensate should not be routed to a sink used by personnel.
- ☐ Individual condensate drain lines must be trapped independently before connecting into a single line.
- ☐ Condensate lines should not have any restrictions, and all traps must be primed with water.
- ☐ Condensate lines should be properly supported to prevent sagging.

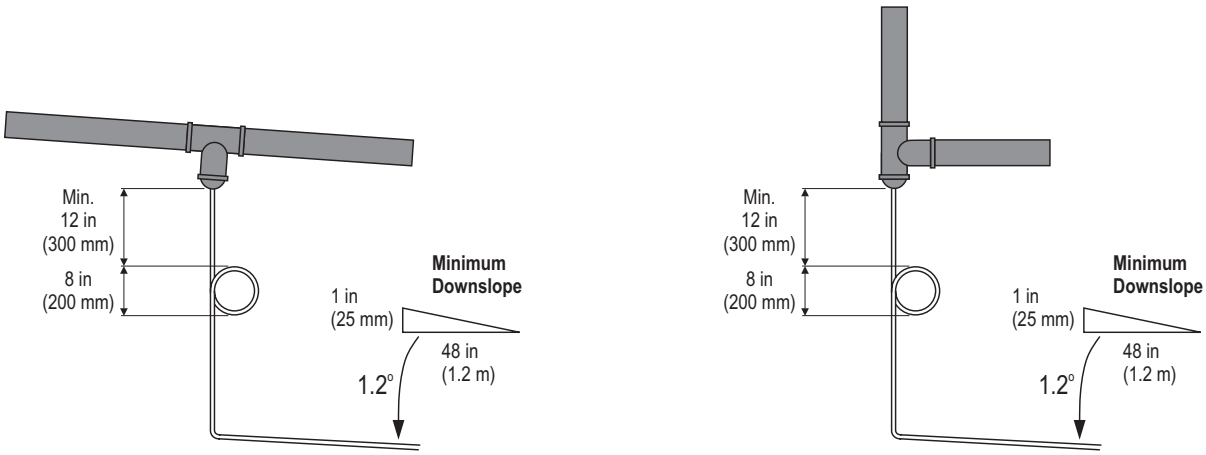

Figure 19: Condensate Drain Lines

Combining Steam Lines

The following is a list of installation requirements for combining steam lines:

- ☐ Multiple steam lines (from a Nortec RS 90L/130/180 with dual steam cylinders, or multiple humidifiers) must not merge except at the steam distributor, and ONLY if the steam cylinders operate in parallel mode – refer to *Figure 20*. If necessary, a specifically designed optional Condair adaptor must be used to connect the steam lines to the steam distributor.
- ☐ All requirements for steam and condensate lines must be satisfied. Refer to *"Steam Lines" on page 34* and *"Condensate Lines" on page 36*.

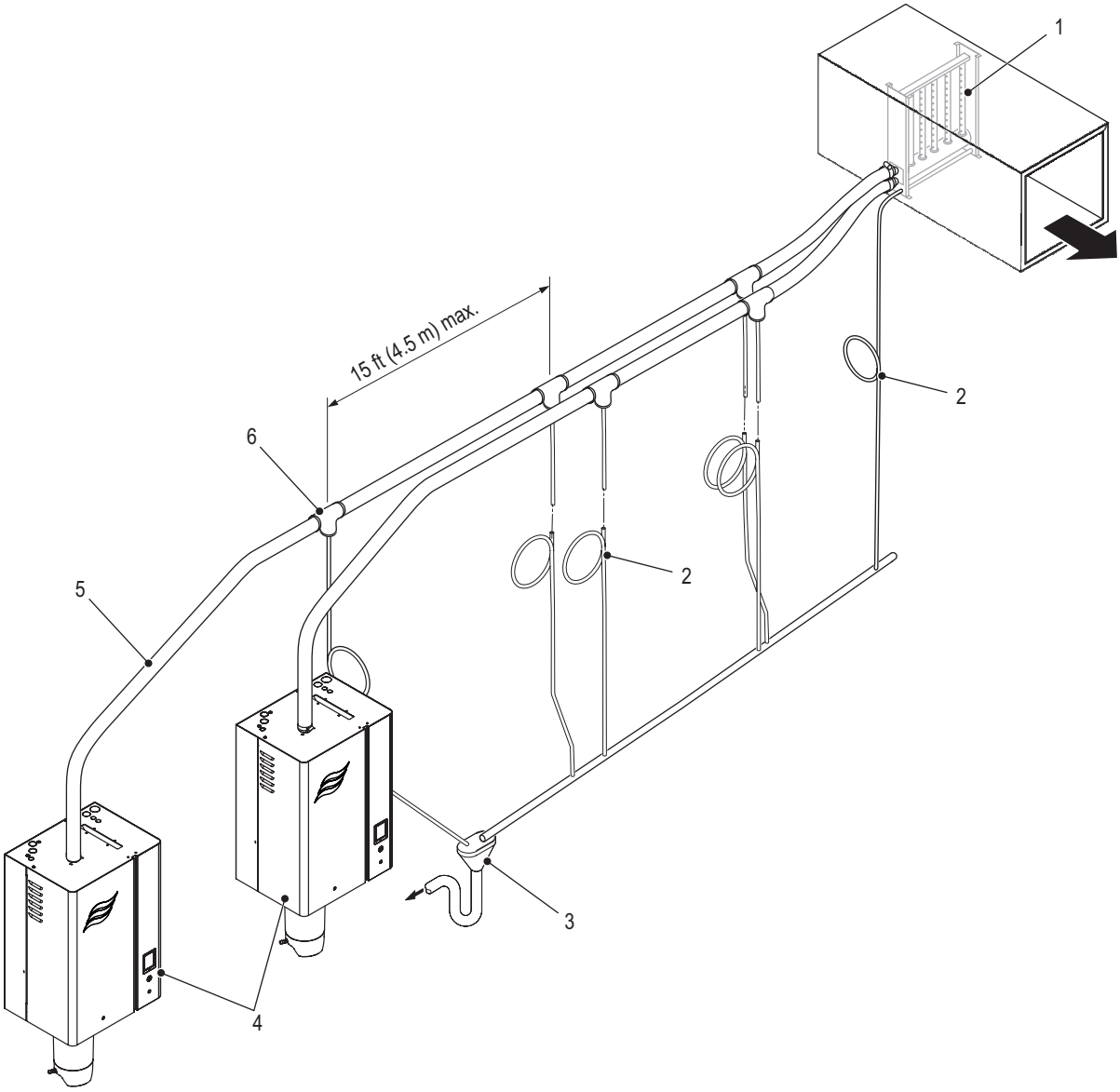

Figure 20: Combining Multiple Steam Lines

1 SAM-e steam distributor
2 Condensate drain line, trap diameter 8 in (200 mm) and located minimum 12 in (300 mm) below condensate port or "Tee" fitting
3 Air gap funnel connected to building drain
4 Nortec RS humidifier – must operate in parallel mode
5 Steam line – constant minimum upslope of 10°, or a constant minimum downslope of 2°
6 "Tee" fitting, full size

4.3.4 Electrical Connection

The power supply to the Nortec RS humidifier is routed into the bottom of the control cabinet. Refer to *Figure 21*.

The following is a list of installation requirements for power connections:

- ☐ The power supply cables should be sized to match the full voltage and current draw listed in the specifications (refer to *"Nortec RS Specifications" on page 17*).
- ☐ The external dedicated fused disconnect switch must be installed close to the humidifier so it can be readily accessible when servicing the unit. The fusing must not exceed the maximum circuit protection listed in the specifications.
- ☐ All wiring must be in accordance with national and local electrical codes.

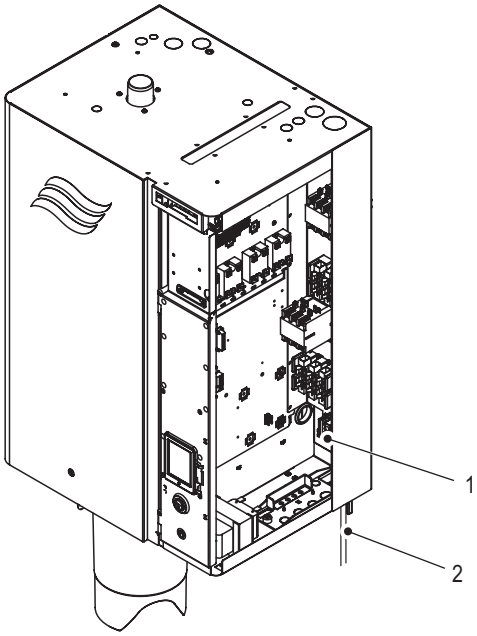

Figure 21: Power Connection (front panel removed for clarity)

1 Terminal block, high voltage supply
2 Power cable

4.4 Control System Design

The Nortec RS humidifier is designed to be regulated by an automated control system utilizing either analog or digital signals. All analog and digital control signal cables are routed to the humidifier through the top of the unit – refer to *Figure 22*. Analog control signals (refer to *"Analog Control Signals" on page 40*) are connected to the low voltage terminal strip in the humidifier, and digital signals (see *"Digital Control Signals" on page 41*) from a computer or the BMS are communicated directly to the integrated control board in the humidifier using a compatible digital communication protocol.

Regardless of the type of control signals, control components for the conditioned environment will vary primarily depending upon the steam distribution method – duct or space (refer to *"Duct Distribution Control Design" on page 43* and *"Space Distribution Control Design" on page 45*). All modulating input signals to the humidifier must be of the same type – either transducers (RH sensor), or humidistats (demand signals).

IMPORTANT! In addition to the analog or digital control signals, the 24 VAC security loop (consisting of On/Off devices) connected to Pin 1 and Pin 2 on the low voltage terminal strip must be closed for the Nortec RS humidifier to operate. Condair highly recommends the use of a high limit humidistat and an air proving switch in the security loop for duct installations – refer to *"Duct Distribution Control Design" on page 43*.

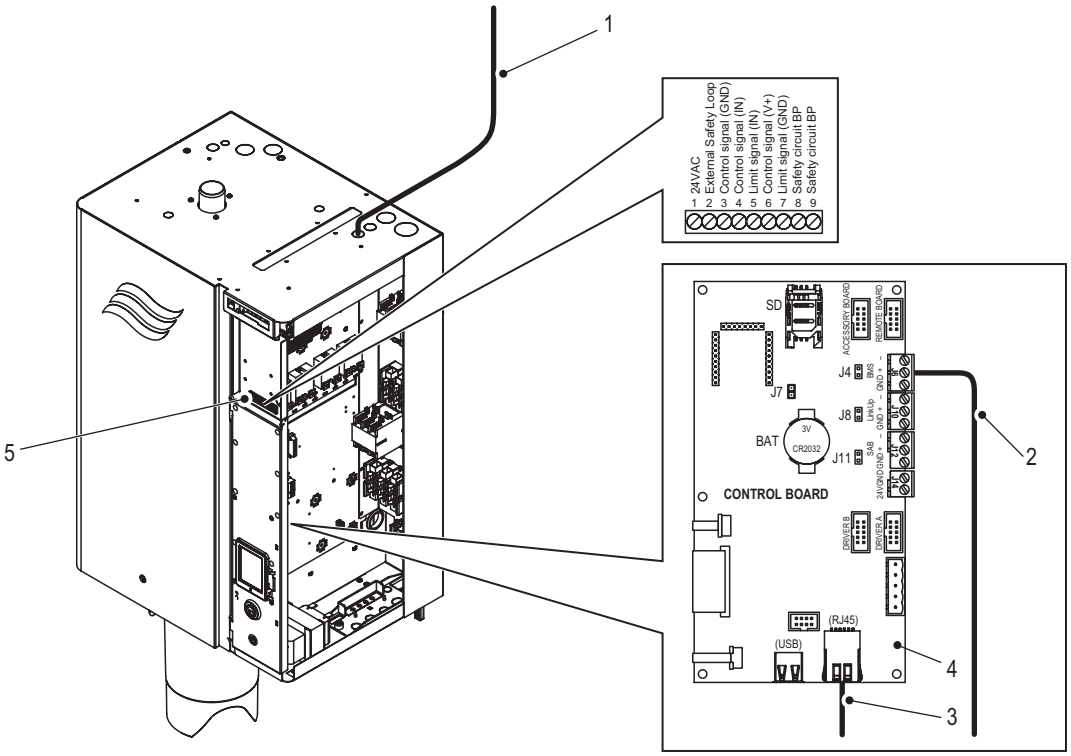

Figure 22: Control Signal Connections

1 Control signal cables, analog and digital
2 Digital signal from BMS – Modbus or BACnet MS/TP
3 Digital signal from BMS – BACnet IP
4 Integrated control board (located behind touchscreen display)
5 Low voltage terminal strip, for analog signals

4.4.1 Control Signal Input

4.4.1.1 Analog Control Signals

The Nortec RS humidifier can be regulated using up to two modulating analog input signals, and multiple On/Off input signals for each steam cylinder. Analog controls can be supplied by Condair or by others.

The Nortec RS humidifier can be factory-configured to enable/disable modulating and On/Off control signals, and set the signal range (refer to *Table 14*). The unit can also be field-configured using the touch-screen display.

Table 14: Nortec RS Acceptable Analog Control Signals

Control Type	Control Signal Type	Acceptable Signal
Modulating control and high limit signals	Demand or transducer	0-5 V, 0-10 V, 1-5 V, 2-10 V, 0-20 V, 0-16 V, 3.2-16 V, 0-20 mA, 4-20 mA
On/Off control and high limit signals	On/Off	Dry contact, 24 VAC or 10 VDC
	Security loop	Dry contact, 24 VAC

Nortec RS 90 RS130 and RS 180 humidifiers with dual steam cylinders have two low voltage terminal strips (designated "A" and "B") to supply separate sets of control signals to each steam cylinder, so the unit can be operated in series or parallel mode, as described in *"General Description" on page 1*.

☐ All control signal wiring must use a minimum of 18 AWG, and the cable length should be kept as short as possible.

Modulating Control

The Nortec RS humidifier can be operated with one or two modulating analog input signals per steam cylinder. If two modulating input signals are used, both signals must be of the same type: demand signals from an external controller, or transducer (RH sensor) signals from an external humidity sensor. In both cases, the humidifier will not start steam production until the calculated system demand exceeds 3%.

Demand Signals: If the humidifier receives a demand signal, it calculates the desired steam production level (as a percentage of the total humidifier capacity) proportional to the incoming demand signal (as a percentage of the signal range). When two demand signal inputs are used, the humidifier responds to the lowest of the two demand signals.

Transducer Signals: If modulating transducers (RH sensor) are used, the humidifier uses an internal PI (proportional-integral) controller to calculate system demand for each channel input. The calculated system demand value for each input channel will vary depending upon the configurable humidity set-points, as well as proportional and integral functions of the internal controller. If two transducer signals are used, two system demand values are calculated and the humidifier responds to the lowest of the two calculated values. Transducers with a possible zero input are not recommended. The Nortec RS humidifier also supports an optional low and high humidity alarm warning with re-configurable humidity triggers.

Security Loop

The security loop connected between Pin 1 and Pin 2 on the low voltage terminal strip consists of 24 VAC On/Off input devices that are part of the humidification system. The Nortec RS humidifier will not operate unless this circuit is closed. The security loop also allows On/Off control of the humidifier, and can be used as feedback to indicate the functional status of the humidification system components critical to the proper and safe operation of the humidifier.

4.4.1.2 Digital Control Signals

The digital communications interface in the Nortec RS humidifier can be used to control the humidifier output and change system configurations, or monitor its operation. Digital communication can be used in conjunction with analog devices to regulate the humidifier operation. Condair recommends the use of transducers for the control and high limit signals when using digital communications.

The Nortec RS humidifier integrates support for standard communication protocols such as BACnet IP, BACnet MS/TP and Modbus RTU. The supported communication protocol can be selected and configured from the touchscreen display. With optional hardware kits, the Nortec RS humidifier can also be configured to communicate using LonWorks, or BTL-certified BACnet IP and BACnet MS/TP protocols – refer to *Table 2 on page 4*.

Note: If using BACnet MSTP, verify PICS/BIBBs details with the building network operator to ensure compatibility. Refer to the BACnet manual (Condair document 2574199) for PICS/BIBBs settings.

BACnet

The Nortec RS humidifier uses the connector (J6) on the integrated control board to connect with the BMS using the BACnet Master/Slave Token Passing (MS/TP) communications protocol, and the Ethernet port (J21) to connect with the BMS using the BACnet IP communications protocol. Refer to BACnet, LonWorks Supplemental Installation and Operation Manual (Condair document 2574199) for control points and connection details.

The following is a list of installation requirements for BACnet communications:

- ☐ 18-24 AWG shielded, twisted pair cable with 120 Ω impedance is recommended for BACnet MS/TP communications. Refer to the BMS supplier for recommended maximum length of communication cables.
- ☐ Category (CAT) -5, -5E, or -6 cable with RJ-45 terminations is recommended for BACnet IP communications.

Modbus RTU

The Nortec RS humidifier uses a three-pole connector (J6) on the integrated control board to facilitate Modbus EIA-485, 2-wire communications with the BMS.

Refer to Modbus Installation and Operation Manual (Condair document 2560599) for the list of supported Modbus parameters and connection/configuration details.

The following is a list of installation requirements for Modbus communications:

- ☐ 18-24 AWG shielded, twisted pair cable with 120 Ω impedance is recommended. CAT-5 cable is also acceptable, but only uses two conductors and the cable shield – refer to the Modbus manual for details.
- ☐ To minimize signal loss, the cable run should not exceed 2200 feet (670 m).
- ☐ To ensure communication reliability, Condair recommends that no more than 8 nodes are connected to a single chain/bus.

LonWorks and BTL-Certified BACnet IP, Bacnet MS/TP

LonWorks and BTL-certified BACnet IP and BACnet MS/TP use an optional interface card mounted on the integrated control board. Refer to BACnet/LonWorks Supplemental Installation and Operation Manual (Condair document 2574199).

The following is a list of installation requirements for LonWorks and BTL-certified BACnet IP and BACnet MS/TP communications:

- ☐ CAT-5 or better cable with RJ-45 terminations is recommended for BTL-certified BACnet IP communications.
- ☐ 18-24 AWG shielded, twisted pair cable with 120 Ω impedance is recommended for LonWorks and BTL-certified BACnet MS/TP.
- ☐ To use the BTL-certified BACnet or LonWorks protocols, jumper J7 on the integrated control board must be Off. When the jumper J7 is On, the native Modbus protocol is enabled.

4.4.2 Linkup

The Linkup function allows linking of up to six integrated control boards (for a maximum of 12 steam cylinders) in a "Main-Extension" configuration through the connector J10 on the integrated control board. One set of control signals (analog or digital) is connected to the unit designated as the "Main" unit.

The Nortec RS humidifiers can then be configured to operate in parallel or in series mode to satisfy humidity demand, as described in *"General Description" on page 1*. Humidifiers operated in series mode permit a lower turn-down ration, however since the Nortec RS has 100% turn-down, it's typically recommended to use parallel mode. In parallel mode, all steam output from the units in the chain connect to a common steam distribution system, which offers even wear on the units.

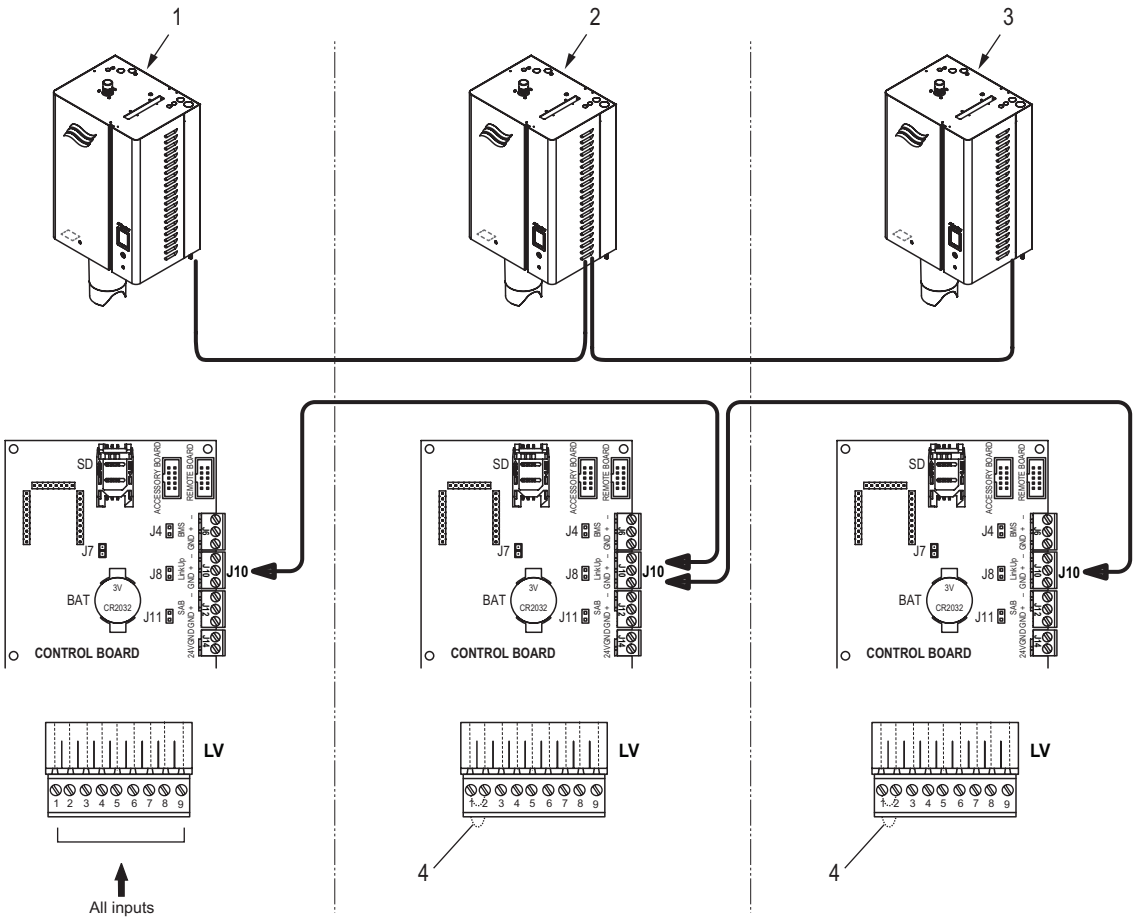

Figure 23: Linkup Wiring

1 Main unit (all control signals to unit)
2 Extension unit #1 (no control signals to unit)
3 Extension unit #X (no control signals to unit)
4 Jumper (on all Extension units)

The following is a list of installation requirements for connecting Nortec RS humidifiers in a Linkup chain:

- ☐ Up to 12 steam cylinders (equivalent of 1080 lbs/hr or 550 kg/h) can be connected together in the Linkup chain.
- ☐ 18-24 AWG multi-strand, twisted pair, shielded cable must be used to connect the units.
- ☐ All control signal inputs (humidistats/transducers and security loop) must be connected to the "Main" unit only.
- ☐ A jumper must be installed between the security loop pins "1" and "2" in the low voltage terminal strip on all "Extension" units.
- ☐ All control signal inputs must be connected to the low voltage terminal strip designated "A" in Nortec RS 90/130/180 humidifiers with dual steam cylinders.

4.4.3 Humidity Control Design

4.4.3.1 Duct Distribution Control Design

When using the supply air duct for steam distribution, Condair highly recommends the use of an air proving switch and a high limit humidistat in addition to a humidity controller. Environments with exterior walls should also consider using an outdoor temperature sensor in the system. Refer to *Figure 24*.

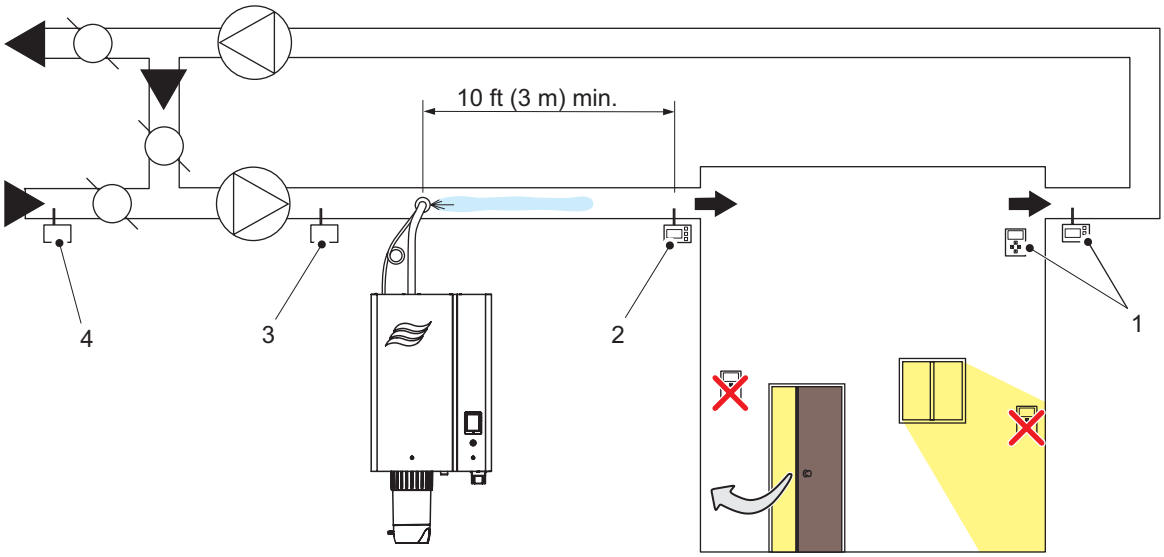

Figure 24: Duct Humidity Control Location

1 Humidity controller (return air duct or inside the room)
2 High limit switch
3 Air proving switch
4 Outdoor temperature sensor (situated outdoors)

Air Proving Switch

Airflow is required for steam vented into the air supply duct to be absorbed before it can be distributed. The normally-open dry contact Condair air proving switch connected to the humidifier's security loop prevents humidification when the air handler is not operational.

High Limit Switch

A high limit switch connected to the humidifier's security loop is used to limit the humidity in the supply air from reaching saturation conditions, which can lead to water damage. Typically an On/Off duct humidistat will suffice for this application, but there are several applications where modulating transducers or humidistats should be used, including the following:

- When using a variable air volume (VAV) air handling system.
- When a high limit switch must be installed after a bend or obstruction in the supply duct.
- Applications that require very high air exchange rate, or 100% outdoor air.
- Installations with short steam absorption distances.

The following installation requirement must be observed when using a high limit switch in a duct distribution system:

☐ The distance between the steam distributor and the Condair duct humidistat or transducer should be minimum 10 ft (3 m), or greater than the calculated absorption distance. Refer to *Figure 24 on page 43*.

Humidity Controller

The humidity controller detects the relative humidity in the conditioned environment and provide feedback to the humidifier. The Nortec RS humidifier is compatible with On/Off humidistats, and transducers (RH sensor), but there are several applications where modulating transducers or humidistats should be used, including the following:

- When using an economizer, or variable air volume (VAV) air handling system.
- Applications that require very high air exchange rate, or 100% outdoor air.
- Applications that require narrow humidity tolerances.

The following installation requirements must be observed when using humidity controllers in a duct distribution system:

☐ Must be installed in a location representative of the conditioned environment. Controls installed in exhaust or return ducts are preferred.

☐ Wall-mounted controls can also be installed in the conditioned environment. However, they should be located in an area that is not exposed to infiltrating air, and where there are no discharge diffusers or localized variations in temperatures.

Outdoor Temperature Setback

An outdoor temperature sensor should be used to prevent condensation on windows or other surfaces that are exposed to outdoor air. Condair outdoor temperature sensors are used in conjunction with Condair humidistats that limit setpoints based upon outdoor temperature – refer to *Table 3 on page 5* for part numbers.

The default setback for the Condair outdoor temperature sensor is shown in *Figure 25 on page 45*, which can be reconfigured depending on the insulation quality of windows.

The following installation requirement must be observed when outdoor temperature sensor in a duct distribution system:

☐ The outdoor sensor must be installed in an area that is representative of the outdoor air temperatures – such as a fresh air intake duct, or located directly outside.

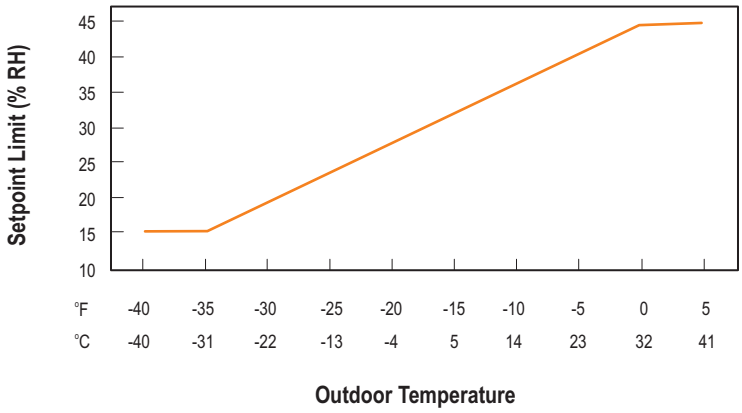

Figure 25: Default Temperature Setback

4.4.3.2 Space Distribution Control Design

When distributing steam directly into the conditioned environment the humidification system will require a wall-mounted On/Off humidistat or transducer (RH sensor). Condair also recommends a high limit switch. Environments with exterior walls should consider using an outdoor temperature sensor to prevent condensation on windows/walls.

The following installation requirement must be observed when using humidity controllers in a space distribution system:

- ☐ Wall-mounted controls should be located in an area that is not exposed to infiltrating air, and where there are no discharge diffusers or localized variations in temperatures.

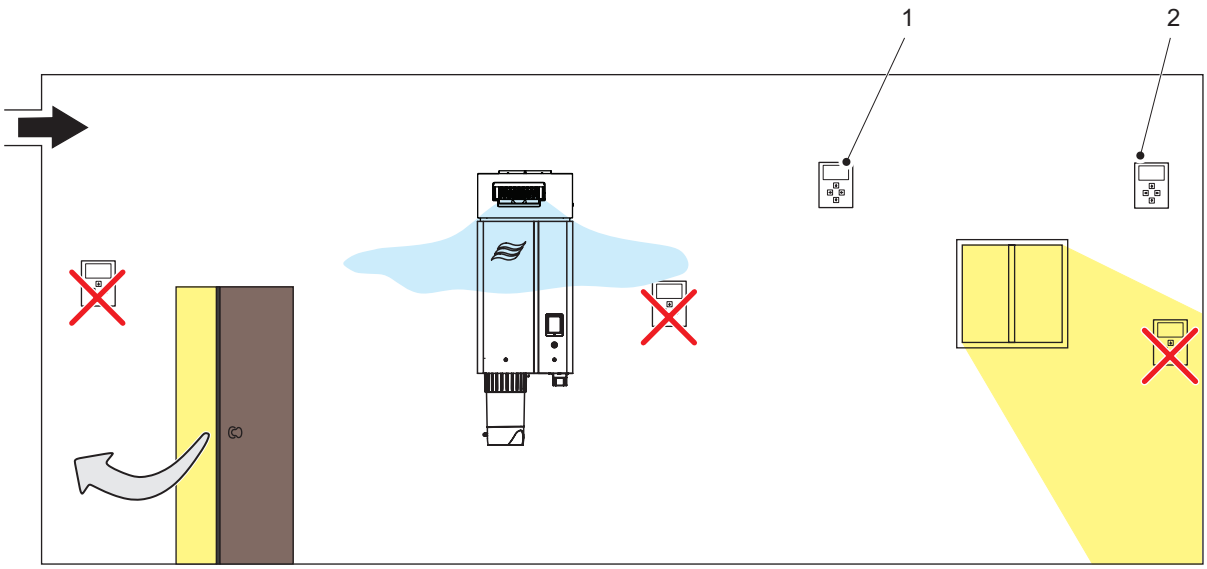

Figure 26: Space Humidity Control Location

1 High limit switch (recommended)
2 Humidity controller (inside the space)

4.4.4 Remote Fault Indication Board

The optional remote fault indication board includes four relays that can be used to provide remote status indication. Refer to *Figure 27*.

Each relay is described below:

Unit On	The normally open relay is closed when the humidifier has power and the On/Off switch is set to the On position.
Steam	The normally open relay is closed when the board detects that the cylinder is drawing current and steam is being produced.
Service	The relay can be wired to open (NC) or close (NO) when a warning is displayed on the humidifier display and the yellow service LED is illuminated.
Error	The relay can be wired to open (NC) or close (NO) when a fault is detected by the humidifier controls.

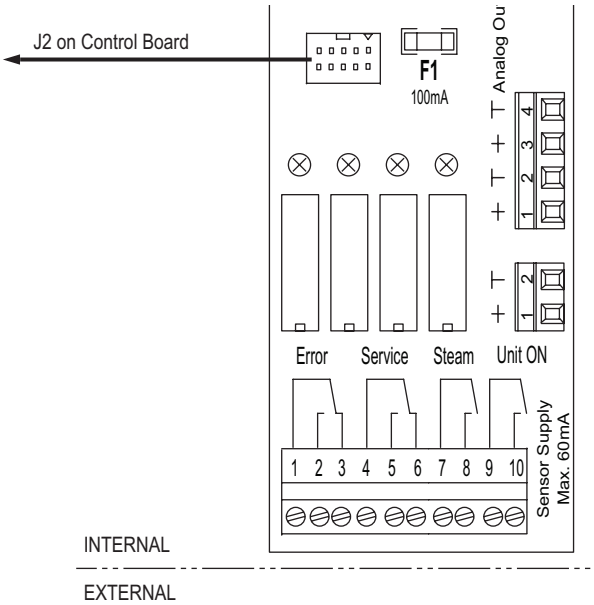

Figure 27: Optional Remote Fault Indication Board

4.4.5 Accessory Board

The optional accessory board includes four relays that can be used to control other accessory devices. Refer to *Figure 28*.

Each relay is described below:

Flush A	The normally open relay can be wired to activate or deactivate the optional valve for flushing the water supply line for steam cylinder A.
Flush B	The normally open relay can be wired to activate or deactivate the optional valve for flushing the water supply line for steam cylinder B.
Fan B	The normally open relay can be wired to activate or deactivate an external fan of the air handling unit connected to steam cylinder B.
Fan A	The normally open relay can be wired to activate or deactivate an external fan of the air handling unit connected to steam cylinder A.

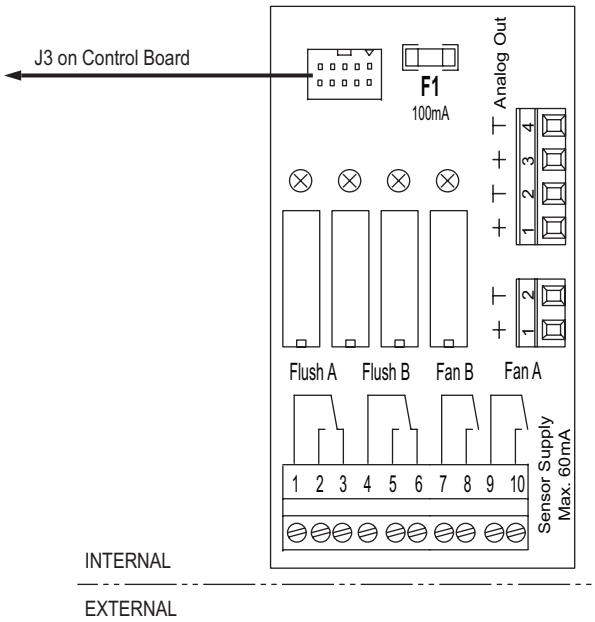

Figure 28: Optional Accessory Board

4.5 Preventative Maintenance

Regular maintenance of the Nortec RS humidifier is a requirement for maintaining the safety and operational efficiency of the humidifier. Maintenance of the humidifier is broken down into two categories:

– **Small maintenance**

  Cleaning of the scale collector tank (only for units equipped with a scale collector tank).

– **Extended maintenance**

  Cleaning of the steam cylinder and other components of the steam and water system.

The control software of the Nortec RS features a maintenance counter for the "Small maintenance" and the "Extended maintenance". The maintenance counters are set at the initial commissioning based on the water condition on site, however the maintenance counters can be adjusted at any time later to the actual operational conditions.

Important! Independently of the maintenance counters the **"Small maintenance"** and the **"Extended maintenance" are to be carried out at least once a year**.

Refer to the Operation and Maintenance Manual (Condair document 2582418) for the regular maintenance requirements for the Nortec RS humidifier.

5 Total Humidification Load Calculation

5.1 Total Humification Load

The total humidification load is the sum of the three primary considerations: base humidification load, moisture content equilibrium, and condensate losses. Each of these is described below.

Base Humidification Load

The base humidification load is defined as the humidification load required to increase the humidity of the unconditioned supply air, from the worst case scenario, to meet the design requirements for the conditioned environment. This is typically the largest contributing factor to the total humidification load, and is described in *"Calculating Base Humidification Load" on page 50*.

Moisture Content Equilibrium

When materials stored in a conditioned environments retain moisture content that is out of equilibrium with the moisture content of that environment, it may have an equalizing effect on the environment (depending upon the hygroscopic properties of the material), thereby increasing or decreasing the relative humidity. This must be be taken into consideration when calculating the total humidification load. Refer to *"Moisture Content Equilibrium" on page 52* for details.

Condensate Losses

Some steam in the steam distribution system will condense back to a liquid state due to convection heat transfer, which reduces the gross output of the humidifier. These losses, as discussed in*"Condensate Loss" on page 53*, must be taken into consideration when calculating the total humidification load.

Once the above considerations have been taken into account, it may be prudent to increase the capacity of the humidifier, to allow for a safety margin, especially if the design conditions will require the unit to regularly operate at or near or its maximum capacity.

Visit *www.na.condairhelp.com* and use the free Condair online program - **H**umidifier **E**ngineering and **L**oad-sizing **P**rogram (H.E.L.P.) to assist you with absorption distance calculations, selection of humidifiers, steam distributors, controls and accessories.

Tutorials on using this program are available from the Literature & Media section of the Condair website – *www.condair.com*.

Additional information on the effects of humidity, relative humidity calculations, load calculations, and recommended design conditions can be found in the Condair Humidification Load Calculation Manual (Condair document 2553856) from *www.condair.com*.

5.1.1 Calculating Base Humidification Load

5.1.1.1 Total Unconditioned Air Supply Volume

The total volume of incoming unconditioned air (ft^3/h), forced and naturally ventilated, depends on the construction of the conditioned environment and the type of air circulation system used.

Forced Ventilation

Typically, an air handler system will exchange a fixed percentage of conditioned air for unconditioned air. This unconditioned air is the volume of air that requires humidification.

Air handler systems vary by design, but will rely upon adding or removing volumes of air from a controlled environment. Air handling systems that add air to the conditioned environment will have a total forced air volume equivalent to the unconditioned supply air volume. Air handling systems that exhaust air from the conditioned environment must have at least an equal volume of unconditioned air reintroduced, which is equal to the total forced air volume.

Accounting for Economizer Cycles

Under normal heating conditions, the unconditioned supply air volume is usually relatively small to avoid large heating and conditioning treatments. However when the economizer cycle is in operation, the unconditioned air volume may be as high as 100% of the total ventilation. To calculate the humidification load for a system with an economizer cycle, the air ventilation and thermal load must be calculated for each month in which the economizer mode may operate to determine the highest humidification load.

Natural Ventilation

A natural ventilation system is one that does not rely upon direct mechanical means to provide air ventilation to the conditioned environment. Air enters the conditioned environment through openings in the building envelope. The amount of makeup air is calculated based on the volume of the conditioned space and an estimate of air changes per hour.

5.1.1.2 Unconditioned Supply Air Moisture

Once the total volume of unconditioned supply air is known, the moisture content of the air supply must be determined. To ensure the humidifier capacity will be able to satisfy design conditions, the calculations must be based on the lowest unconditioned supply air temperatures and humidity that can be expected on a yearly basis. In applications where the unconditioned supply air will be drawn from the local atmosphere, Condair advises utilizing the weather data compiled by geographic location published by the ASHRAE Climate Data Centre.

Once the lowest temperature for the given geographic location is known, the moisture content of the unconditioned air supply can be determined as follows:

Supply Air Moisture (lb/ft^3) = Maximum Supply Air Moisture (lb/ft^3) × Lowest Humidity (% RH)

where,

- Maximum Supply Air Moisture is the moisture content (lb/ft^3) at 100% RH, obtained from *Table 15 on page 51* (imperial units) or *Table 16 on page 52* (metric units) corresponding to the lowest anticipated supply air temperature for the unconditioned air supply;
- Lowest Humidity is the lowest anticipated humidity (% RH) for the unconditioned supply air source.

5.1.1.3 Conditioned Air Moisture

The moisture content for the designed air conditions must be determined next. To ensure the humidifier capacity will be able to satisfy design conditions, the calculations must be based on the highest desired design air temperatures and humidity.

Once the highest design temperature and highest design humidity for the application are known, the moisture content of the conditioned air supply can be determines as follows:

Conditioned Air Moisture (lb/ft^3) = Maximum Supply Air Moisture (lb/ft^3) × Design Humidity (% RH)

where,

- Max Supply Air Moisture is the moisture content at 100% RH, obtained from *Table 15 on page 51* (imperial units) or *Table 16 on page 52* (metric units) corresponding to the highest design air temperature for the conditioned environment;
- Design Humidity is the highest required humidity (% RH) for the conditioned environment.

5.1.1.4 Base Humidification Load

The base humidification load is the moisture required to bring the unconditioned supply air to meet the conditioned air requirements, and is calculated as follows:

Base Load (lb/h) = Total Supply Air Volume (ft^3/h) × {Conditioned Air Moisture (lb/ft^3) - Supply Air Moisture (lb/ft^3)}

where,

- Total Supply Air Volume is the total volume of incoming unconditioned air (ft^3/h), as described in *"Total Unconditioned Air Supply Volume" on page 50*.
- Conditioned Air Moisture is the moisture content (lb/ft^3) of the conditioned air supply, as calculated in *"Conditioned Air Moisture" on page 51*;
- Supply Air Moisture is the moisture content of the unconditioned air supply, as calcualted in *"Unconditioned Supply Air Moisture" on page 50*.

Table 15: Moisture Content of Air at 100% RH (Imperial Units)

°F	lb/ft^3	°F	lb/ft^3	°F	lb/ft^3	°F	lb/ft^3	°F	lb/ft^3
-20	0.0000343	41	0.000424	61	0.000857	81	0.00163	101	0.00293
-10	0.0000414	42	0.000440	62	0.000886	82	0.00168	102	0.00302
-5	0.0000500	43	0.000457	63	0.000916	83	0.00173	103	0.00310
0	0.0000686	44	0.000474	64	0.000946	84	0.00178	104	0.00319
5	0.0000871	45	0.000491	65	0.000979	85	0.00184	105	0.00328
10	0.000111	46	0.000509	66	0.00101	86	0.00190	106	0.00337
15	0.000141	47	0.000527	67	0.00104	87	0.00195	107	0.00347
20	0.000177	48	0.000547	68	0.00108	88	0.00201	108	0.00356
25	0.000223	49	0.000567	69	0.00111	89	0.00207	109	0.00366
30	0.000279	50	0.000587	70	0.00116	90	0.00213	110	0.00376
31	0.000291	51	0.000609	71	0.00119	91	0.00220	111	0.00387
32	0.000304	52	0.000630	72	0.00123	92	0.00226	112	0.00397
33	0.000316	53	0.000651	73	0.00127	93	0.00233	113	0.00408
34	0.000327	54	0.000674	74	0.00131	94	0.00240	114	0.00419
35	0.000340	55	0.000699	75	0.00135	95	0.00247	115	0.00430

°F	lb/ft³	°F	lb/ft³	°F	lb/ft³	°F	lb/ft³	°F	lb/ft³
36	0.000353	56	0.000723	76	0.00139	96	0.00254	120	0.00491
37	0.000366	57	0.000747	77	0.00144	97	0.00262	125	0.00559
38	0.000380	58	0.000773	78	0.00149	98	0.00269	130	0.00634
39	0.000394	59	0.000800	79	0.00154	99	0.00277	135	0.00719
40	0.000409	60	0.000829	80	0.00158	100	0.00285	140	0.00812

Table 16: Moisture Content of Air at 100% RH (Metric Units)

°C	kg/m³	°C	kg/m³	°C	kg/m³	°C	kg/m³	°C	kg/m³
-30	0.000578	-10	0.00218	10	0.00943	30	0.0303	50	0.0828
-29	0.000553	-9	0.00238	11	0.0100	31	0.0320	51	0.0867
-28	0.000540	-8	0.00259	12	0.0107	32	0.0337	52	0.0908
-27	0.000540	-7	0.00281	13	0.0114	33	0.0356	53	0.0951
-26	0.000551	-6	0.00305	14	0.0121	34	0.0375	54	0.0995
-25	0.000573	-5	0.00330	15	0.0129	35	0.0395	55	0.104
-24	0.000606	-4	0.00357	16	0.0137	36	0.0416	56	0.109
-23	0.000650	-3	0.00385	17	0.0145	37	0.0438	57	0.114
-22	0.000704	-2	0.00415	18	0.0154	38	0.0461	58	0.119
-21	0.000769	-1	0.00447	19	0.0163	39	0.0485	59	0.124
-20	0.000845	0	0.00481	20	0.0173	40	0.0510	60	0.130
-19	0.000931	1	0.00516	21	0.0183	41	0.0536	61	0.136
-18	0.00103	2	0.00554	22	0.0194	42	0.0563	62	0.142
-17	0.00113	3	0.00594	23	0.0206	43	0.0592	63	0.148
-16	0.00125	4	0.00636	24	0.0218	44	0.0621	64	0.154
-15	0.00138	5	0.00680	25	0.0230	45	0.0652	65	0.161
-14	0.00152	6	0.00727	26	0.0243	46	0.0685	66	0.168
-13	0.00167	7	0.00777	27	0.0257	47	0.0718	67	0.175
-12	0.00183	8	0.00829	28	0.0272	48	0.0753	68	0.182
-11	0.00200	9	0.00884	29	0.0287	49	0.0790	69	0.190

5.1.2 Moisture Content Equilibrium

Materials stored in conditioned environments may retain moisture content that is out of equilibrium with the moisture content of that environment. Depending upon the hygroscopic properties of the material, it may have an equalizing effect on the environment, thereby increasing (desorption) or decreasing (absorption) the relative humidity (RH) of the surrounding environment. Any materials stored in the conditioned environment that may release or absorb significant moisture from the atmosphere should have their hygroscopic properties assessed by the manufacturer. Once the severity of this influence is known, it should be incorporated into the total humidification load.

Hygroscopic regain is defined as the amount of water a completely dry material will absorb from the air through desorption or absorption. Any hygroscopic product that is purchased and sold by weight must be located in a carefully controlled environment.

5.1.3 Condensate Loss

Some steam in the steam distribution system will condense back to a liquid state due to convection heat transfer, which reduces the gross output of the humidifier. An estimate of the condensate losses throughout the distribution system should be determined to ensure the total humidifier capacity, less any condensate loss, will still satisfy the total load requirement. The factors that contribute to condensate losses are discussed below.

Steam Distributor Losses

The steam distributor is often the largest contributor to condensate losses in a steam distribution system. The amount of steam lost due to condensation is dependent upon the design of the distributor system. Refer to the steam distributor engineering guide for specific information on condensate loss.

Using Condair stainless steel air-gap insulation is one way to reduce distributor loses and conserve energy. Additional information on calculating condensate losses, and savings from the use of insulating distributors can be found in the Condair white paper “Condair Stainless Steel Air Gap Insulation R Value”.

To compensate for condensate losses when using a SAM-e distribution manifold, the calculated humidification must be increased accordingly. Refer to *Table 17* and *Table 18* for SAM-e condensate losses.

Table 17: Condensate Losses for Un-insulated SAM-e Distribution Manifold

Air Velocity fpm (m/s)	Atmospheric Steam Condensate Losses* (% of Maximum Capacity)	
	55 °F (13 °C)	70 °F (21 °C)
500 (2.5)	15%	12%
1000 (5.1)	20%	15%

* These values may change due to other unknown variables, and as such should only be used as a guideline.

Table 18: Condensate Losses for Insulated SAM-e Distribution Manifold

Air Velocity fpm (m/s)	Atmospheric Steam Condensate Losses* (% of Maximum Capacity)	
	55 °F (13 °C)	70 °F (21 °C)
500 (2.5)	5%	4%
1000 (5.1)	10%	8%

* These values may change due to other unknown variables, and as such should only be used as a guideline.

For more information on specifying SAM-e insulation, refer to SAM-e Engineering Manual (Condair document 1503529).

Supply Line Losses

Condensate losses per linear foot can be roughly estimated in a system with properly designed atmospheric steam lines. The total length of the atmospheric steam line must be taken into account, which is the sum of the linear length of the steam pipe and equivalent length of every fitting in the line. For equivalent lengths of common fittings see *Table 13 on page 35*. For design information on steam lines refer to *"Atmospheric Steam and Condensate Lines" on page 34*.

Once total equivalent linear length is determined, *Table 19* can be used to estimate the humidifier capacity lost to supply line losses.

*Table 19: Approximate Condensate Per Foot of Atmospheric Steam Line**

Steam Capacity lb/h (kg/h)**	Nominal Steam Line Size – Copper Tube (MED Type-L) in (mm)	Nominal Steam Line Size – Stainless Steel Tube (wall thickness 0.065 in) in (mm)	Steam Loss in Condensation lb/h/ft (kg/h/m)
4-30 (1.8-14)	0.75 (19)	0.875 (22)	0.06 (0.09)
30-100 (14-45)	1.5 (38)	1.75 (45)	0.11 (0.18)
200-300 (91-136)	3 (76)	3 (76)	0.16 (0.23)
400-660 (181-299)	4 (102)	4 (102)	0.22 (0.33)

* Based on 1 in (25 mm) pipe insulation at 3 inches of water column (745 Pa) duct static pressure.
** Inclusive

6 Product Selection

The following checklist can be used to select the Nortec RS humidifier and its options and accessories. However, Condair strongly advises you to visit www.na.condairhelp.com and use the free Condair online program – **H**umidifier **E**ngineering and **L**oad-sizing **P**rogram (H.E.L.P.) to assist you in sizing the humidifier and selecting options and accessories. All part numbers are also available from www.na.condairhelp.com.

6.1 Humidifier and Options

Humidifier

Refer to "Total Humification Load" on page 49 for the required total capacity of the humidifier, then select an available model (or combination of available humidifier models) from Table 8 on page 17. Enter the selection below, making sure that the total capacity of the model(s) selected exceeds the total humidification load.

Humidifier Model and Capacity			Quantity
	RS 10 – 10 lb/h (4.5 kg/h)	Single unit Small	
	RS 15 – 15 lb/h (6.8 kg/h)	Single unit Small	
	RS 20 – 20 lb/h (9.1 kg/h)	Single unit Small	
	RS 30 – 30 lb/h (13.6 kg/h)	Single unit Medium	
	RS 45 – 45 lb/h (20.4 kg/h)	Single unit Medium	
	RS 65 – 65 lb/h (29.5 kg/h)	Single unit Medium	
	RS 90 – 90 lb/h (59.0 kg/h)	Single unit Medium	
	RS 90 – 90 lb/h (59.0 kg/h)	Double unit Large	
	RS 130 – 130 lb/h (68 kg/h)	Double unit Large	
	RS 180 – 180 lb/h (81.6 kg/h)	Double unit Large	

If more than one humidifier is to be supplied to satisfy the total humidification load, select this checkbox if all units are to supplied with the same humidifier options.

Power

Refer to Table 8 on page 17 for the available power configurations, then select the specific power configuration for your site.

Humidifier Power Requirements	
Voltage:	
Phase:	

Options

Select options and accessories, as required. For details of the options and accessories refer to *Table 3 on page 5* and *Table 3 on page 5* respectively. Refer to *Table 5 on page 9* for option part numbers.

Humidifier Options and Accessories		Part Number
	Remote fault indication board (refer to *"Remote Fault Indication Board" on page 46* for additional details)	RFI
	High Precision	P
	Scale Management	SC
	Accessory board (refer to *"Accessory Board" on page 47* for additional details)	ACC
	Mounting bar	MP
	Mounting rack	MR
	In-line water filter (refer to *Table 3 on page 5* for part number)	

Controls

The humidifier can be factory-configured to accept specific analog control signals, and thus eliminate the need to configure it in the field. Refer to *"Analog Control Signals" on page 40* for additional details.

Select the required configuration for control signal and channels. Refer to *Table 6 on page 10* for part numbers.

Control Signal Acceptance		Single Channel	Dual Channel	Part Number
	0-5 VDC			
	0-20 mA			
	4-20 mA			
	0-10 VDC			
	0-16 VDC			
	1-5 VDC			
	2-10 VDC			
	0-20 VDC			

Select control accessories, as required, for automated regulation of the humidifier. Refer to "Control System Design" on page 39 for details of the control system, and Table 3 on page 5 for details of accessories and part numbers.

Control Accessories		Part Number
	Air proving switch	
	Duct-mounted outdoor temperature setback sensor	
	Exterior-mounted outdoor temperature setback sensor	
	Plug-in transformer, 120 VAC to 24 VAC	
	Control humidistat (refer to Table 7 on page 11 for part numbers)	
	High limit humidistat (refer to Table 7 on page 11 for part numbers)	

Select a digital communications protocol, if required, for interfacing the Nortec RS humidifier with building automation systems. Refer to "Digital Control Signals" on page 41 or BACnet/LonWorks Supplemental manual (Condair document 2585293) for details.

Digital Communications Protocol		Part Number
	BACnet IP, BACnet MS/TP	Standard
	Modbus	Standard
	Condair Online	Standard
	BTL-certified BACnet MS/TP	BAC-BTL-MSTP
	BTL-certified BACnet IP	BAC-BTL-IP
	LonWorks	LON

6.2 Steam Distribution Equipment

Select a steam distributor that exceeds the production capacity of the humidifier(s), fits the duct/air handler size (if applicable), and accomodates the steam outlet connection to the humidifier. Refer to "Steam Distribution" on page 31 for available methods.

If a SAM-e is required, refer to the SAM-e Engineering Manual (Condair document 1503529) for selection information and part numbers, then make the appropriate selections below.

SAM-e Configuration			Quantity	Part Number
	Steam inlet adaptor		–	
	SAM-e header		–	
	Steam tubes			
		Insulation (improves energy efficiency by as much as 70%)	–	
		Mounting Frame (required for vertical duct installation)	–	

If a Steam Distributor is required, refer to the Steam Distributor Engineering Manual (Condair document 1506117) for selection information and part number, then make the appropriate selection below.

Steam Distributor Configuration		Quantity	Part Number
	Steam distributor		

If a blower pack is required, refer to the Blower Pack Installation Operation and Maintenance Manual (Condair document 2582277) for additional details, then make the appropriate selection below.

Blower Pack Configuration		Quantity	Part Number
	Blower pack (built-on)	–	BOBP
	Blower pack (remote-mounted) – 110-120 VAC, 1 Phase, wall outlet powered, for 1-3/4 in (45 mm) steam outlet		2579400
	Blower pack (remote-mounted) – 110-120 VAC, 1 Phase, wall outlet powered, for 7/8 in (22 mm) steam outlet		2579401

If steam and condensate hoses and accessories are required, make the appropriate selection below. Refer to *"Atmospheric Steam and Condensate Lines" on page 34* for additional details on steam hoses.

Steam and Condensate Hose and Accessories		Length (inches)	Part Number
	Steam hose, 1-3/4 in (45 mm) I.D.		1328820
	Condensate hose, 3/8 in (9.5 mm) I.D.		1328834
	Self-Actuated Condensate Cooler, 140 °F (60 °C)	–	1710010
	24 V Electric Condensate Cooler, 140 °F (60 °C)	–	1710020

If tees are required, make the appropriate selection below. Refer to *"Atmospheric Steam and Condensate Lines" on page 34* for additional details on steam and condensate lines.

Steam Line Reducer and Tee		Quantity	Part Number
	Tee adaptor, 1-3/4 × 1-3/4 × 3/8 in (45 × 45 × 9.5 mm) – for condensate drainage		1329635

To asssist you with purchasing and installing a Nortec RS humidifier, a *"Sample Specification"* and *"Blank Schedule"* are included in *Appendix A* for your convenience.

A Appendix

A.1 Sample Specification

1.1 Work Included:

a. Nortec RS Series resistive element humidifier[s] as indicated on drawing[s] and as indicated on schedule[s].

b. Complete and operable humidification system [which meets applicable building codes]

c. Equipment start-up and project inspection by qualified factory trained representative.

1.2 Quality Assurance:

a. Certifications, C-UL US Listed.

b. ISO 9001-2008.

c. ANSI/NFPA 70 - National Electrical Code.

d. AHRI 640, “Standard for Commercial and Industrial Humidifiers.”

e. ASHRAE Standard 135 BACnet

1.3 Related Sections:

a. 23 Mechanical General

b. 23[ ] Piping Installation

c. 23[ ] Control System

1.4 Submittals:

a. Submit product data under provisions of Section 23. Include product description, model, dimensions, component sizes, rough-in requirements, service sizes, and finishes. Include rated capacities, operating weights, furnished specialties, and accessories.

b. Submit manufacturer’s installation instructions.

c. Submit operation and maintenance data.

d. Submit coordination drawings. Detail fabrication and installation of humidifiers. Include piping details, plans, elevations, sections, details of components, and dispersion tubes. Detail humidifiers and adjacent equipment. Show support locations, type of support, weight on each support, and required clearances.

e. Submit wiring diagrams including power, signal, and control wiring. Differentiate between manufacturer-installed and field-installed wiring.

f. Submit water pressure requirements.

1.5 Schedules:

a. Refer to information contained in schedule[s] attached to this specification.

b. Humidifiers to be of type, capacity, and arrangement as listed in schedule[s].

c. Include accessories listed in schedule[s] and those accessories required for type of unit.

ELECTRIC STEAM HUMIDIFICATION SYSTEM - MODEL NORTEC RS

PART 2 - PRODUCTS

2.1 Provide Nortec RS resistive element humidifier generating mineral-free, sterile steam for use with potable, De-Ionized (DI), or Reverse Osmosis (RO) water. Packaged unit, wall mounted, atmospheric steam generation using resistive heating element. Electrode technology and boiler steam (pressure steam) technology not acceptable.

2.2 Unit[s] to be complete with:

a. Touchscreen controller with standard building automation and Online connectivity:

i. Intuitive touchscreen control with color graphic user interface.

ii. Standard building automation communication protocols BACnet IP, BACnet MSTP and Modbus. Additional hardware required for building automation communication not acceptable.

ii. Embedded web interface for easy configuration and remote monitoring from any computer with a web browser over a local area network (LAN) connection.

iv. USB interface for new software/feature upload and download of operational information.

v. Single or dual channel analog signal acceptance, supporting both demand and transducer control. Ability to control setpoint from humidifier control when using transducer controls.

b. Packaged system with Condair resistive element technology:

i. Incoloy based resistive heating element for steam production.

ii. Modulating output between 4% and 100% of rated capacity.

ii. Control accuracy of up to +/- 1% RH using optional Precision solid state relay control and high precision humidistat.

iv. Separate scale collection chamber external from main boiling tank when using optional Scale Management system.

v. Dual magnetic electronic float system, located outside of the boiling water to ensure accurate water level control and reduced maintenance. Systems using conductivity probes or floats located within hot reservoir are not acceptable.

vi. Self-diagnostics during start-up of system to prevent unsafe operation of the unit[s]:

a. Fill valve check.

b. Float level check.

c. Drain pump check.

vii. Durable powder coated steel cabinet with zero side clearance requirement for minimal footprint.

viii. Insulating air gap between plumbing and electrical compartment for increased electronic reliability.

ix. Standard internal drain water tempering to ensure maximum 140°F [60°C] drain water. External drain water cooler not acceptable.

x. Integral fill cup with minimum 1-inch [25 mm] air gap to prevent back siphoning.

xi. Automatic off-season shut-down [after 3 days of “no call”] will completely drain the boiling tank[s] and automatically restart on call for humidity.

xii. Programmable drain settings too allow cycling small water quantities during operation without interrupting steam production.

xiii. Integral design allowing easy installation and access for servicing.

2.3 Optional Accessories

a. Refer to ‘Option schedule’

PART 3 - EXCECUTION

3.1 Installation:

a. Install humidifiers per manufacturers’ instructions.

b. Install with required clearance for service and maintenance.

3.2 Accessories:

a. Install accessories in accordance with manufacturer’s recommendations.

3.3 Commissioning:

a. Start-up of humidifier to be by factory trained technician.

A.2 Blank Schedule

A blank schedule is included on the following page for your convenience.

Tag	Area served	Type	Mftr.	Humidifier Model	Duct Dimen. (W×H)	Airflow (cfm)	Temp. Entering (°F)	Humidity Entering (% RH)	Humidity Leaving (% RH)	Capacity (lb/h)	Input (kW)	Voltage (V)	Phase	Freq. (Hz)	Weight (lb)	Notes

Notes

Notes

Warranty

Condair Inc. and/or Condair Ltd. (hereinafter collectively referred to as THE COMPANY), warrant for a period of two years after installation or 30 months from manufacturer's ship date, whichever date is earlier, that THE COMPANY's manufactured and assembled products, not otherwise expressly warranted (with the exception of the cylinder), are free from defects in material and workmanship. No warranty is made against corrosion, deterioration, or suitability of substituted materials used as a result of compliance with government regulations.

THE COMPANY's obligations and liabilities under this warranty are limited to furnishing replacement parts to the customer, F.O.B. THE COMPANY's factory, providing the defective part(s) is returned freight prepaid by the customer. Parts used for repairs are warranted for the balance of the term of the warranty on the original humidifier or 90 days, whichever is longer.

The warranties set forth herein are in lieu of all other warranties expressed or implied by law. No liability whatsoever shall be attached to THE COMPANY until said products have been paid for in full and then said liability shall be limited to the original purchase price for the product. Any further warranty must be in writing, signed by an officer of THE COMPANY.

THE COMPANY's limited warranty on accessories, not of the companies manufacture, such as controls, humidistats, pumps, etc. is limited to the warranty of the original equipment manufacturer from date of original shipment of humidifier.

THE COMPANY makes no warranty and assumes no liability unless the equipment is installed in strict accordance with a copy of the catalog and installation manual in effect at the date of purchase and by a contractor approved by THE COMPANY to install such equipment.

THE COMPANY makes no warranty and assumes no liability whatsoever for consequential damage or damage resulting directly from misapplication, incorrect sizing or lack of proper maintenance of the equipment.

THE COMPANY makes no warranty and assumes no liability whatsoever for damage resulting from freezing of the humidifier, supply lines, drain lines, or steam distribution systems.

THE COMPANY retains the right to change the design, specification and performance criteria of its products without notice or obligation.

Sales and Service:

U.S.A.
1021 6th Street
Racine, WI 53403

CANADA
2740 Fenton Road
Ottawa, Ontario K1T 3T7

TEL: 1.866.667.8321
FAX: 613.822.7964

EMAIL: na.info@condair.com
WEBSITE: www.condair.com