In-Duct High Pressure Nozzle Humidification System HP HVAC Series

Submittal Drawings

Date: _____

Job Name: _____

Contractor: _____

Contractor or Order No.: _____

Engineer: _____

Agent: _____

Agent P.O. No.: _____

Date Ordered: _____

Date Required: _____

Condair (USA) Inc.
2700 90th Street, Sturtevant, WI 53177 Tel: 262.884.4669

Condair (Canada) Ltd.
2740 Fenton Road, Ottawa, ON K1T 3T7 Tel: 613.822.0335

1-866-667-8321
Email: na.info@condair.com
Fax: 613.822.7964

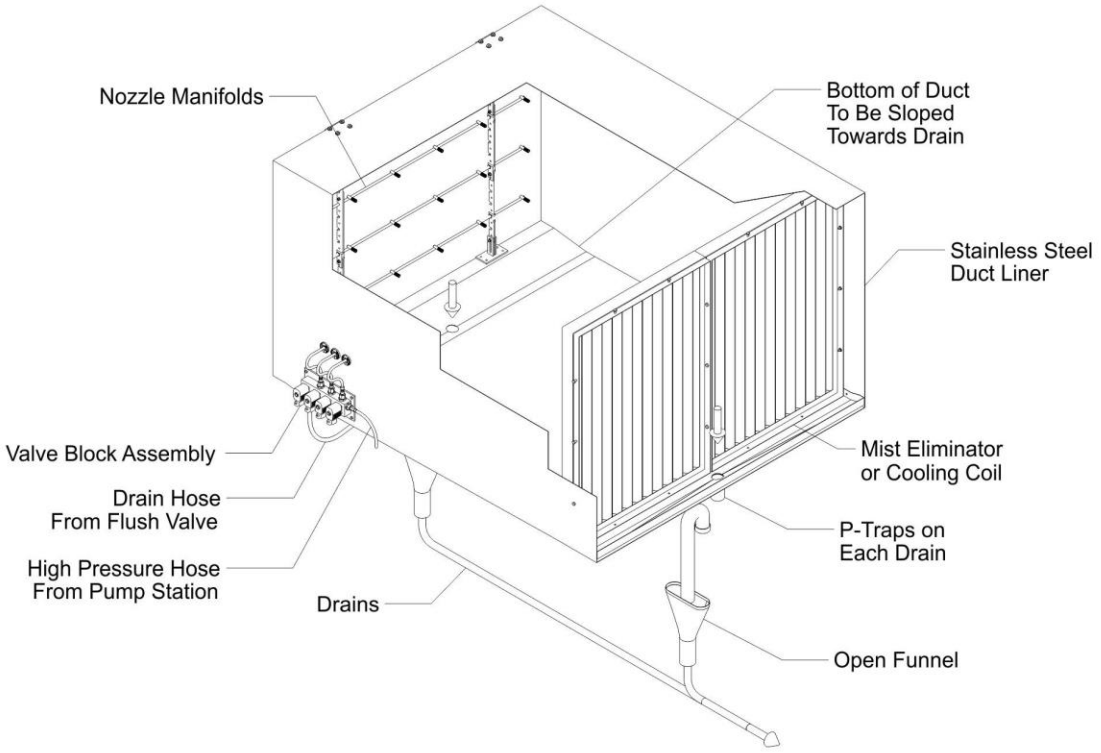

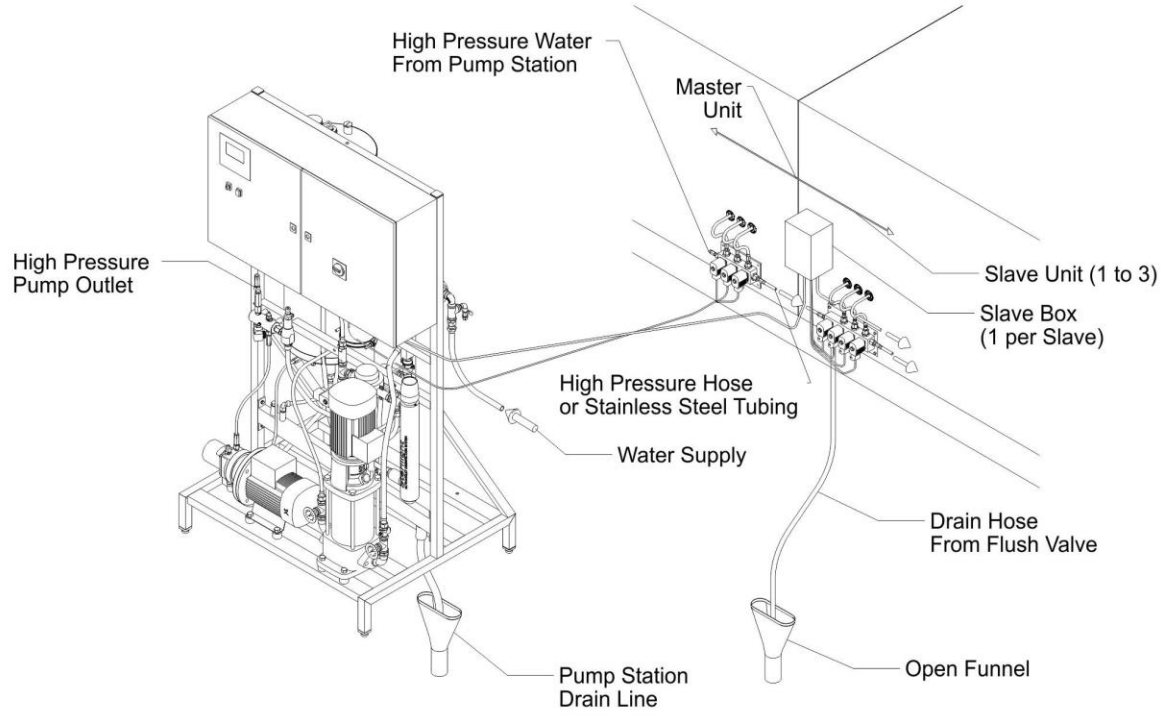

condair

HP Series
HP General Installation
December, 2018

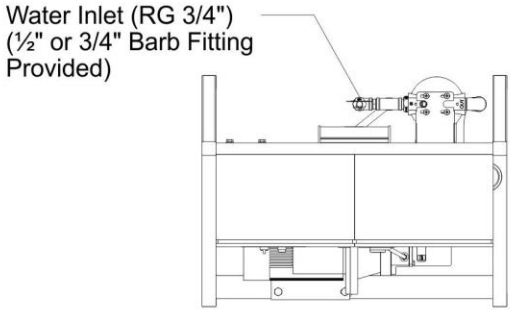

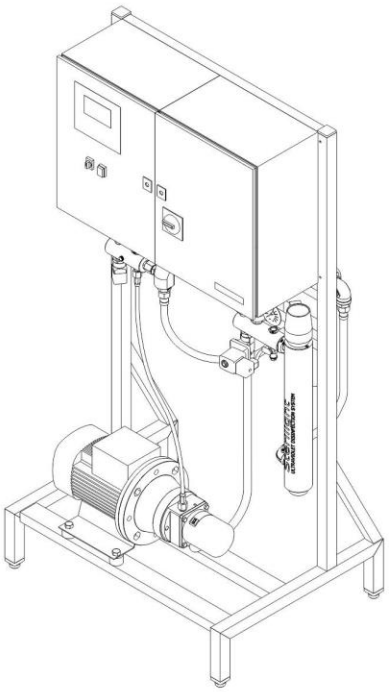

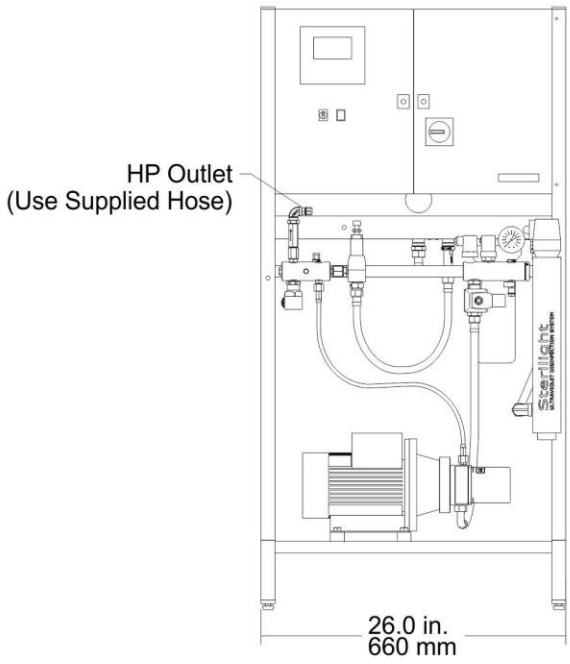

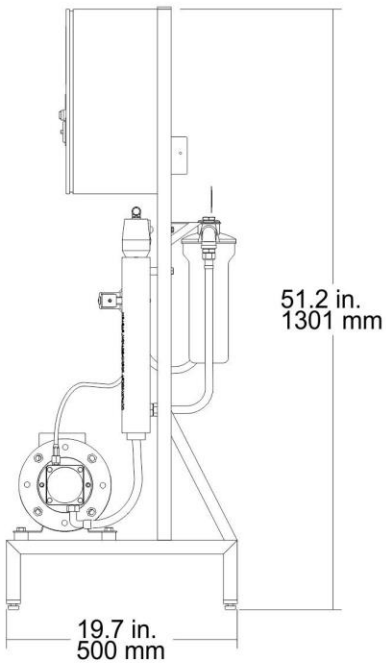

condair

HP Series - HP 100, 200VFD, 300, 500, 500VFD, 800, 800VFD, 1300VFD
December, 2018

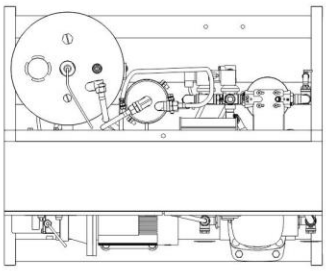

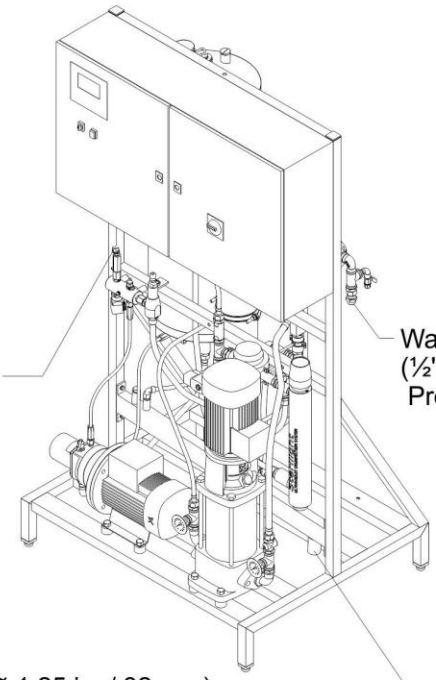

HP Outlet
(Use Supplied HP Hose)

Water Inlet (RG 3/4")
(½" or 3/4" Barb Fitting
Provided)

Drain Connector (Ø 1.25 in. / 32 mm)
Min. Diameter of Drain Hose: Ø 1.60 in. / 40 mm

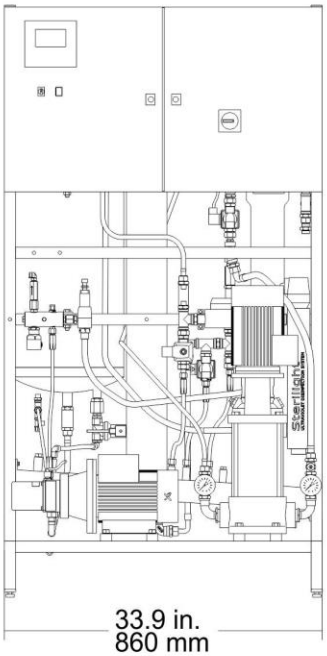

33.9 in.
860 mm

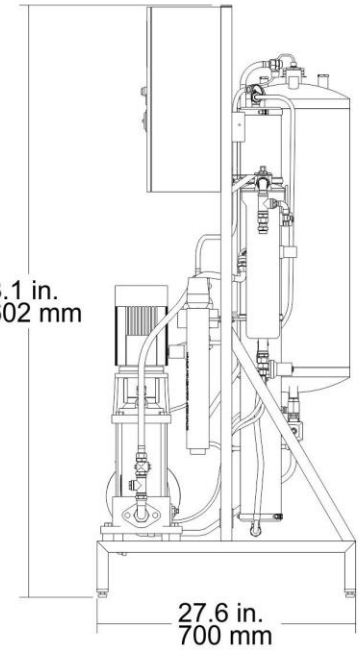

63.1 in.
1602 mm

27.6 in.
700 mm

condair

HP Series - HPRO
100, 200VFD, 300, 500, 500VFD
December, 2018

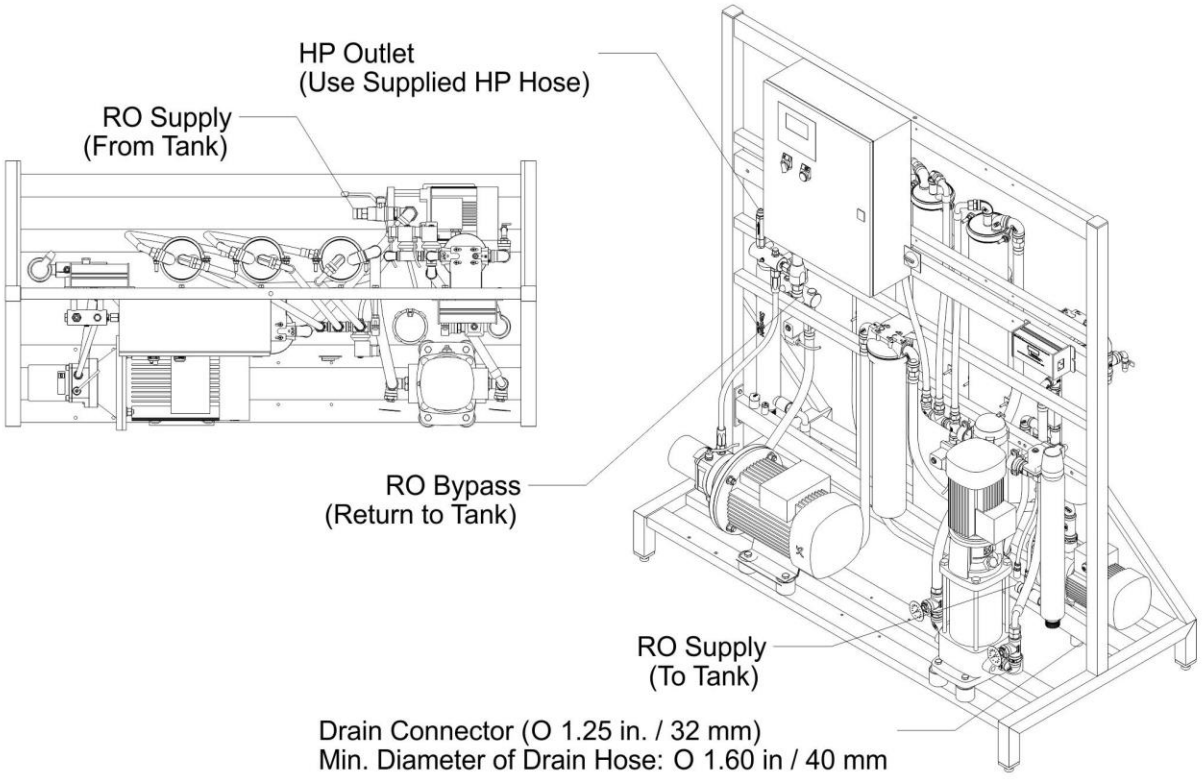

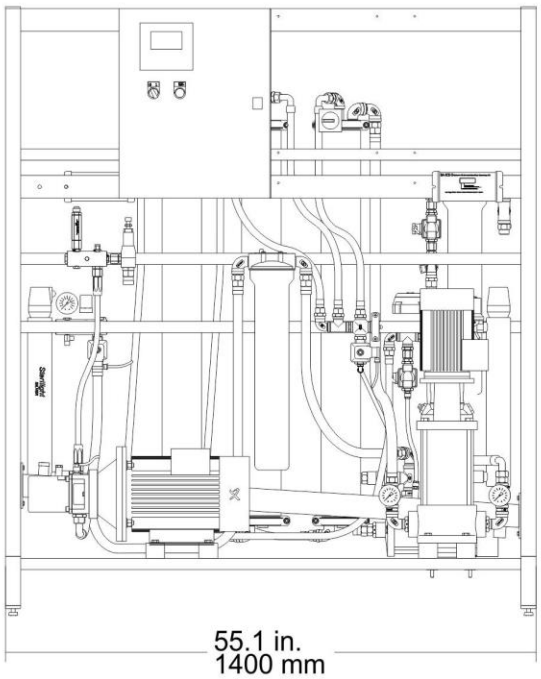

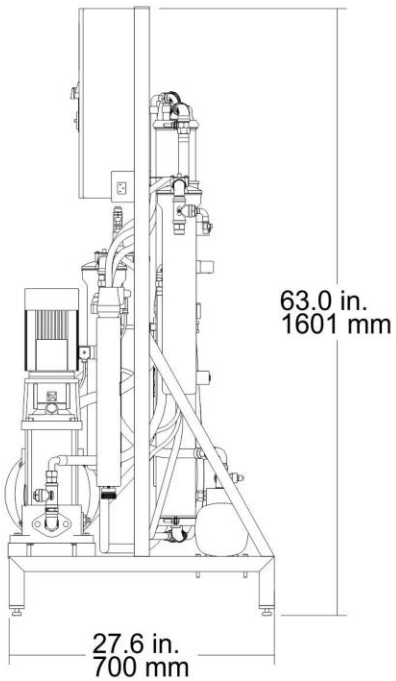

condair

HP Series - HPRO
HPRO 800, HPRO 800VFD
December, 2018

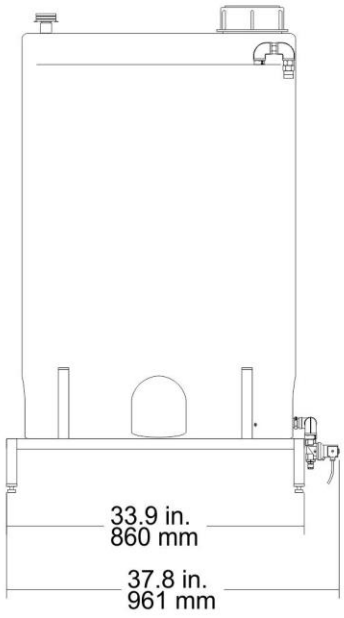

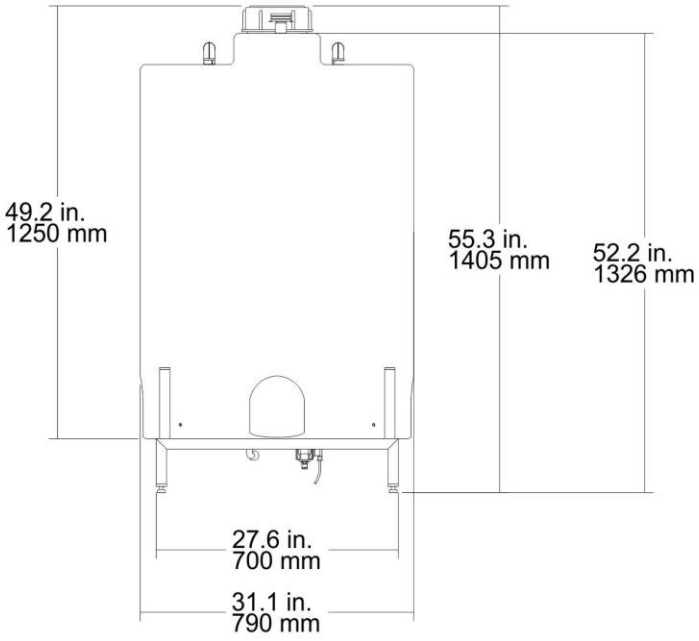

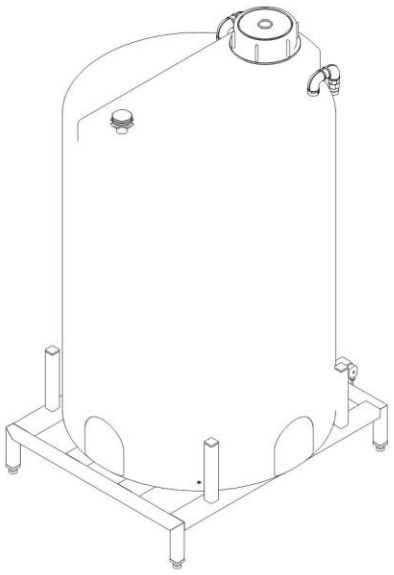

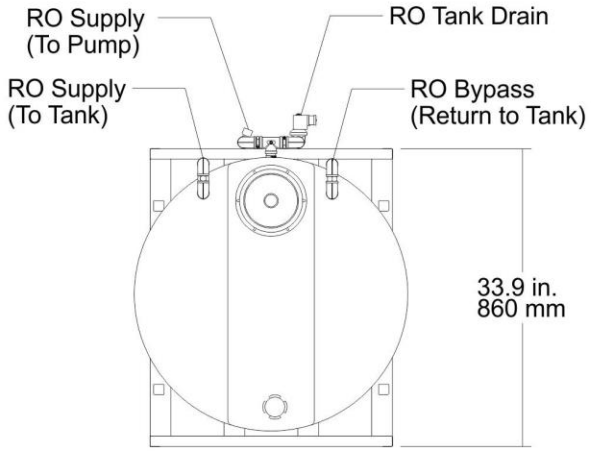

condair

HP Series - HPRO 500 and 800
132 gallons (500 L) Tank
December, 2018

Technical specifications for high pressure hose:

Construction:
Inner tube: Polyester elastomer
Reinforcement: Wire of tensile carbon steel with brass
Cover: Polyurethane

Temperature range:
- 40 °C to 98 °C
- 40 °F to 208 °F

		EX 1.1	EX 1.2	EX 1.4	EX 1.6
Item no.		107.100.000	107.101.000	107.104.000	107.105.000
Hose dimension	**inch**	1/16"	1/8"	1/4"	3/8"
Hose inner diameter	**mm**	1.91 ±0.1	3.35 ±0.1	6.48 ±0.15	9.65 ±0.15
Hose outer diameter	**mm**	5.54 ±0.1	6.98 ±0.15	11.68 ±0.15	15.11 ±0.15
Max. Operating pressure	**bar**	100	350	325	250
	Psi	1,450	5,076	4,713	3,626
Min. burst pressure @20°C	**bar**	400	1.400	1.300	1.000
	Psi	5,801	20,305	18,855	14,504
Min. bend radius	**in (mm)**	1.12 (30)	1.38 (35)	2.17 (55)	2.76 (70)
Nominal weight	**g/m**	38	60	165	230

Only to be used with stainless steel hose couplings supplied by Condair

Coupling type	**Item no.**	108.100.000	108.101.000	108.102.000	108.103.000
Tool	**Item no.**	160.000.000	160.001.000	160.005.000	160.006.000

Properties:

- Safety thermoplastic hose to work at high operating pressures
- Excellent flexibility and flex fatigue
- Excellent resistance to chemicals and solvents
- UV and ozone resistant
- Suitable for water based hydraulics up to 70 °C
- Excellent abrasion resistance
- Low volumetric expansion for quick hydraulic response time
- Static free – 100 % electrical conductivity
- Exceeds SAE 100 R1, R2 and DIN requirements
- Min flow resistance
- Low weight per meter

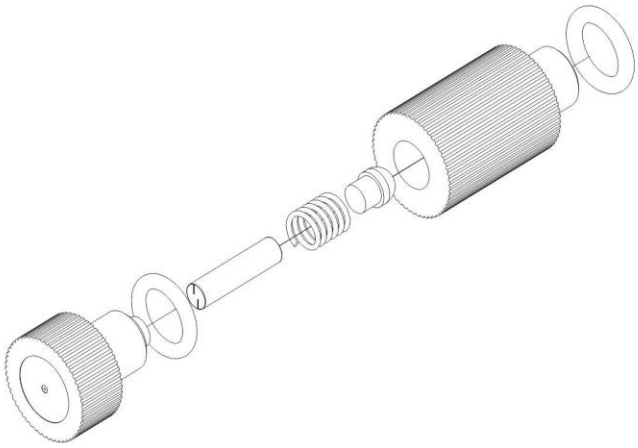

Specifications			
Nozzle			
lbs/hr	5.5	9.9	13.2
l/hr	2.5	4.5	6
Capacity			
lbs/hr	3.74 - 5.5	7.7 - 11	9.9 - 14.3
l/hr	1.7 - 2.5	3.5-5.0	4.5-6.5
Working Pressure			
PSI	507.63 - 1015.26	507.63 - 1015.26	507.63 - 1015.26
Bar	35-70	35-70	35-70
Material	316 Stainless Steel	316 Stainless Steel	316 Stainless Steel
Thread	12/24 UNC/2A	12/24 UNC/2A	12/24 UNC/2A
Non-Drip Valve	Standard	Standard	Standard
Filter	Optional	Optional	Optional
Requirements for Conductivity µS/cm*	5 < EC < 1000	5 < EC < 1000	5 < EC < 1000
***Lower conductivity results in longer service life and a lower risk for blockage**			

Nortec HP nozzles are specifically designed to atomize water without the use of impingement pins or compressed air. Water under pressure is sprayed though an orifice which produces droplets between 5 and 10 microns in size. The nozzles are constructed from 316SS to ensure durability and long life. The nozzles also have a built-in anti-drip check valve to prevent dripping after the system has shut down.

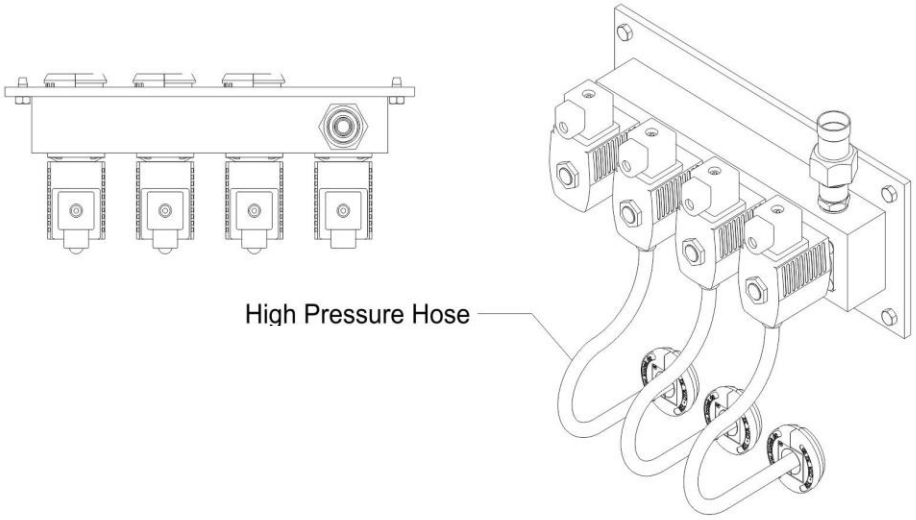

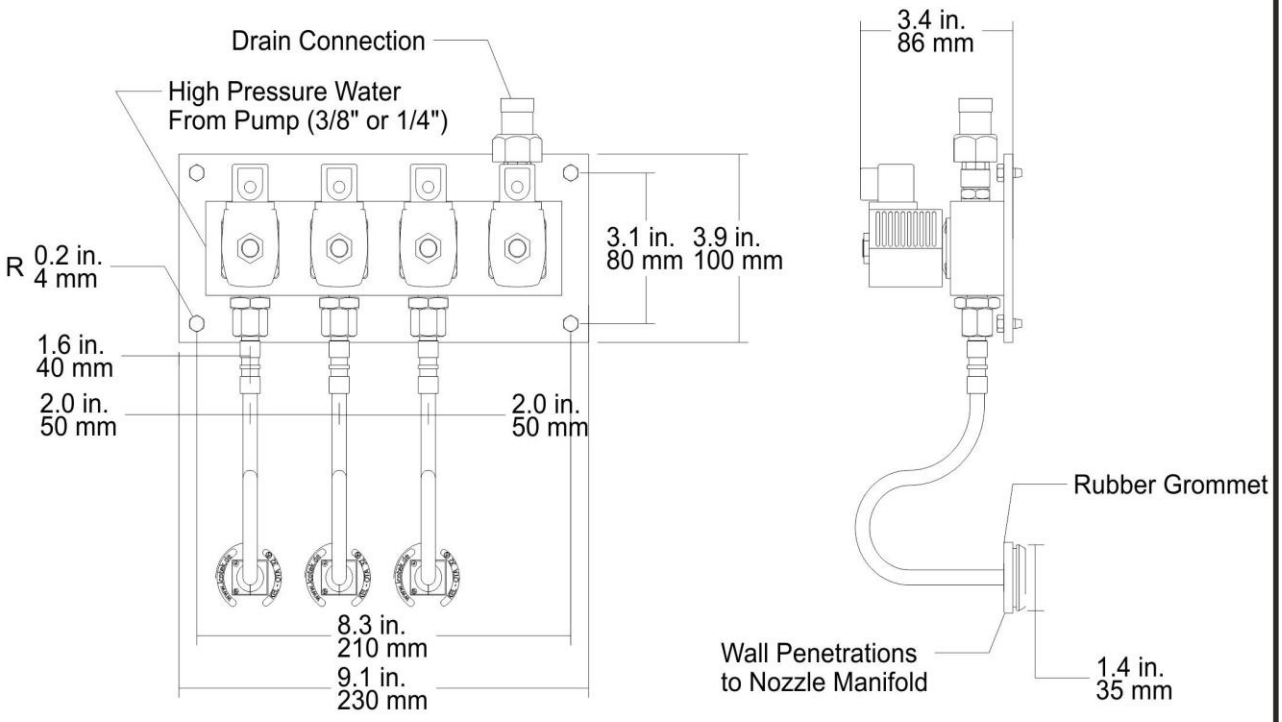

condair

HP Series -
Valve Block 7 Step (3 valves + flush)
December, 2018

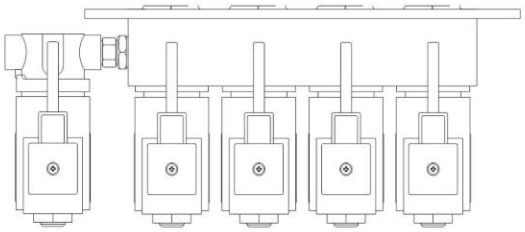

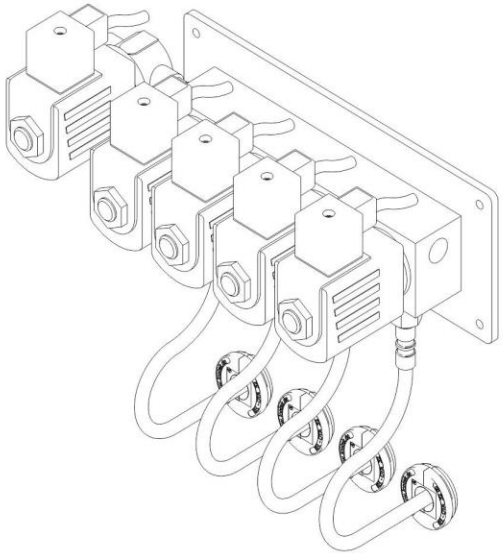

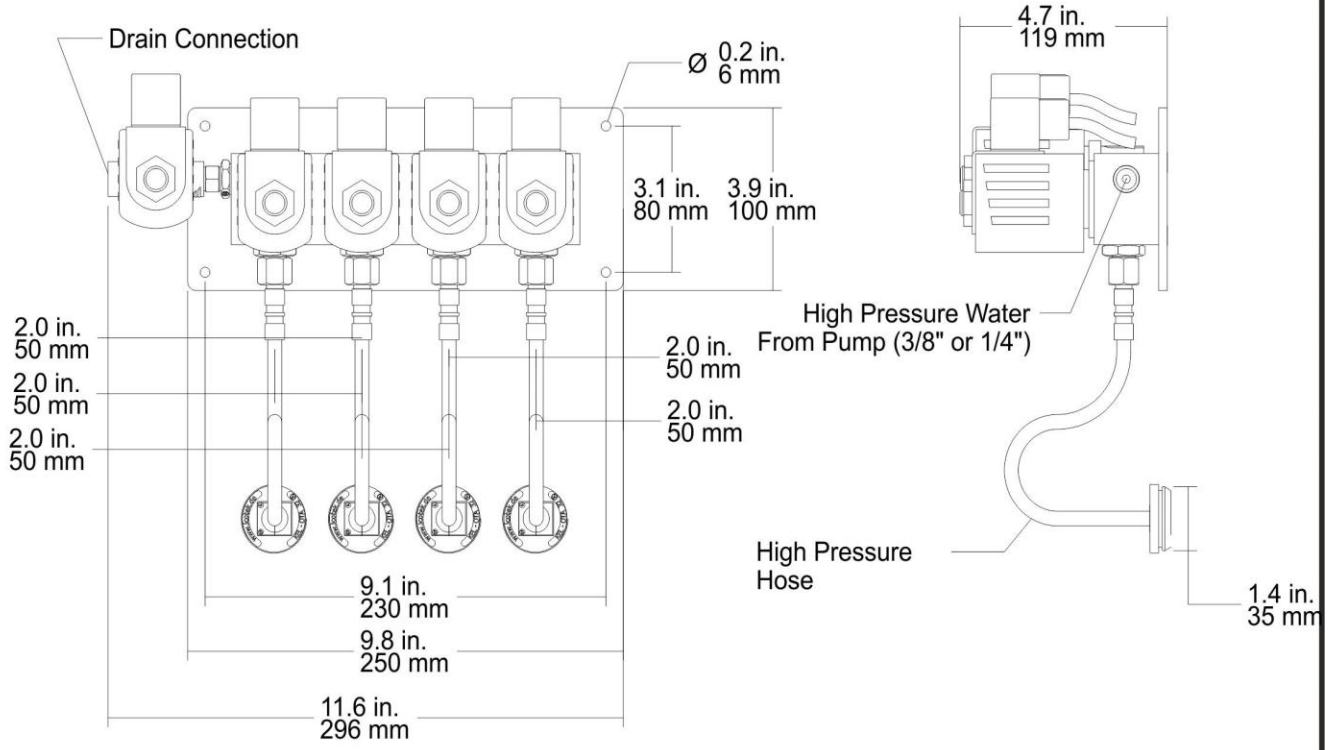

condair

HP Series -
Valve Block 15 Step (4 valves + flush)
December, 2018

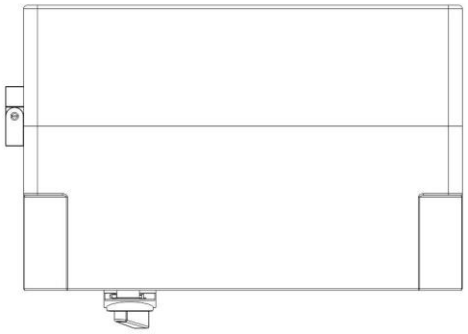

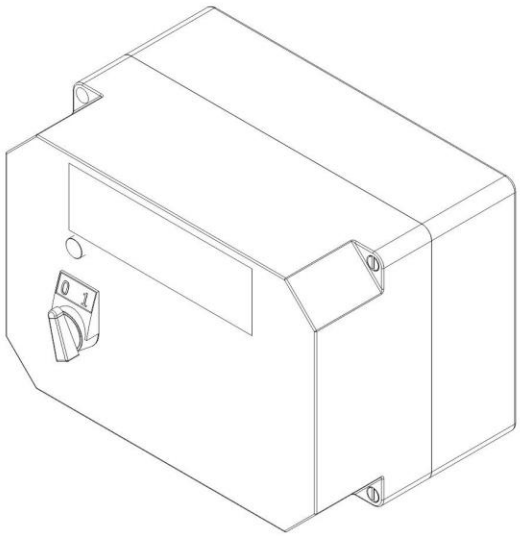

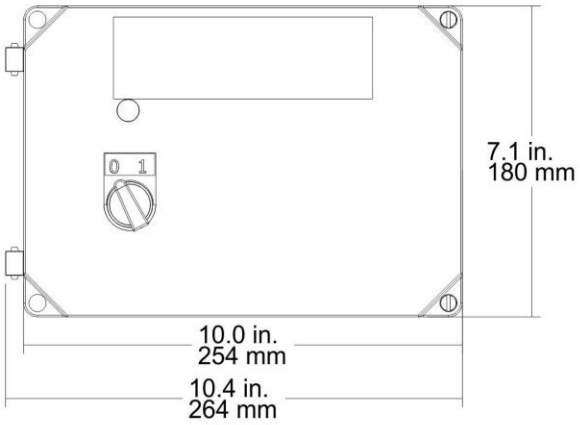

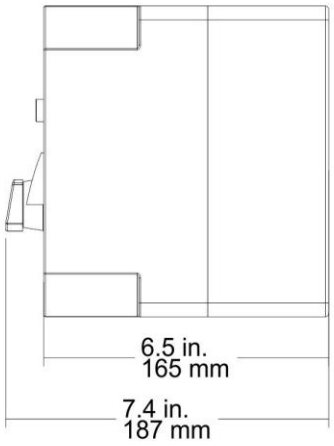

condair

HP Series -
HP Control Box (Slave Panel)
December, 2018

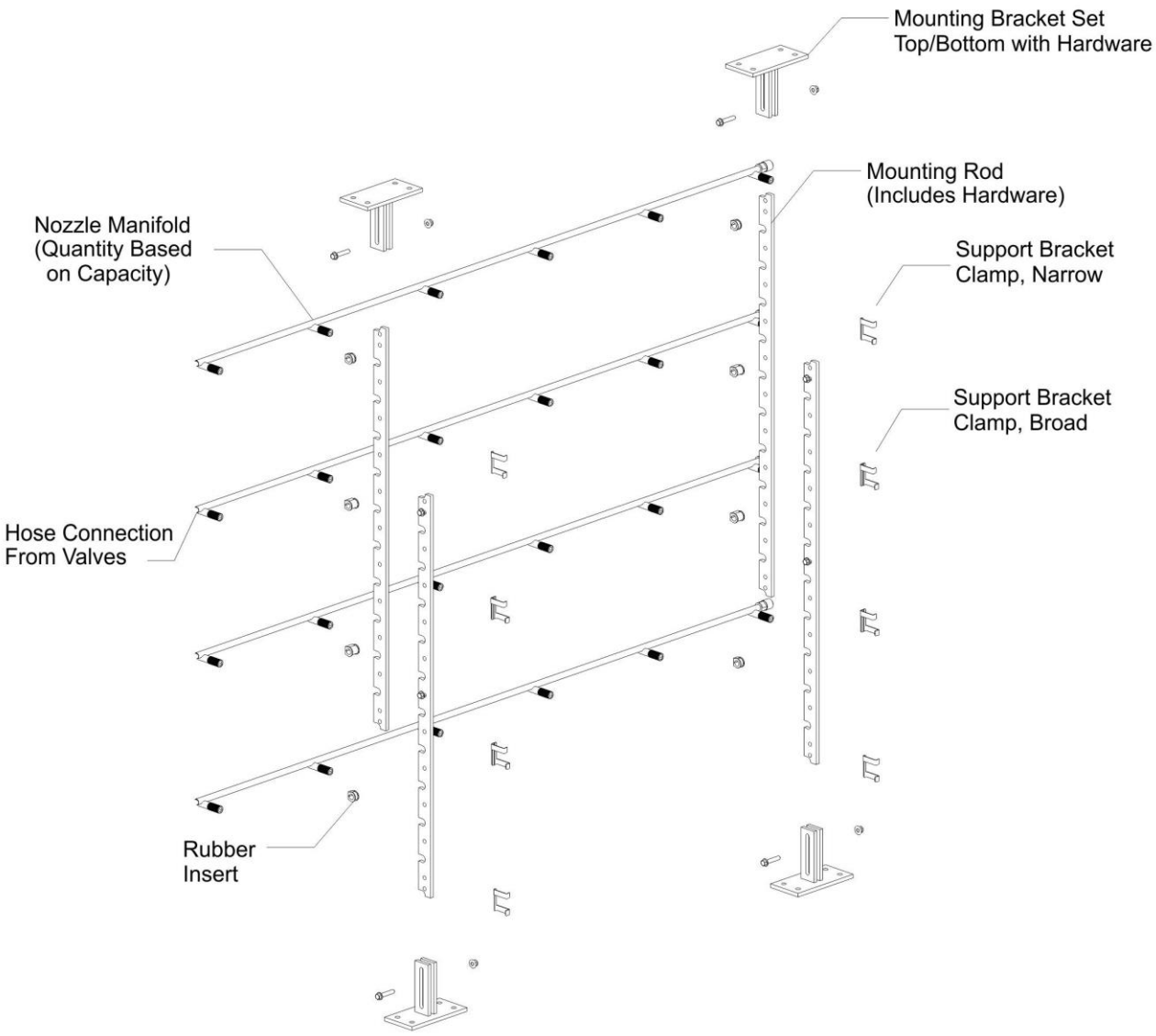

condair

HP Series
HP General Manifold Installation
December, 2018

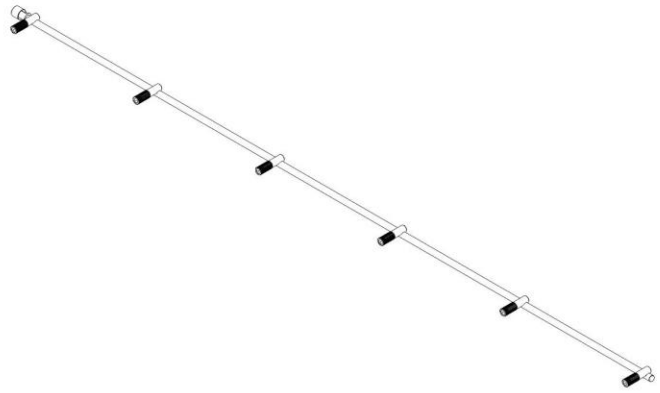

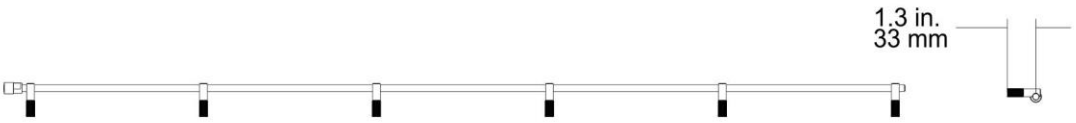

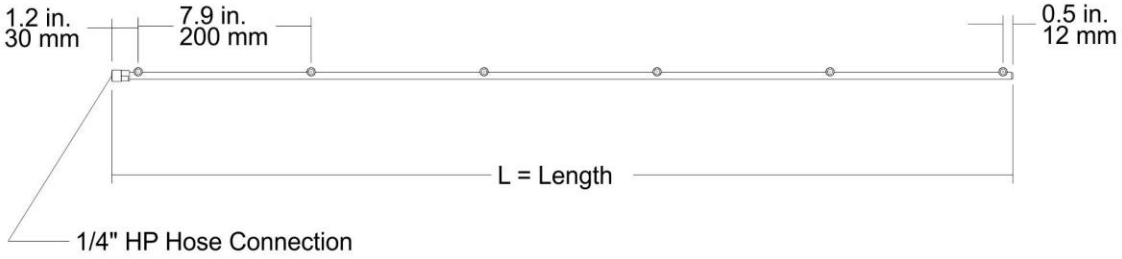

Description	Length (in)	Length (mm)	Nozzle Qty.
Base Bracket 420	19.5	495	3
Base Bracket 620	25.4	645	4
Base Bracket 820	33.1	840	5
Base Bracket 1020	41.1	1045	6

condair

HP Series
Nozzle Manifold Base Assembly
December, 2018

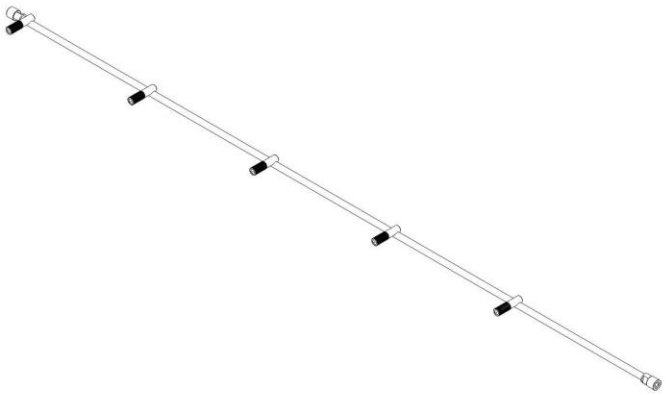

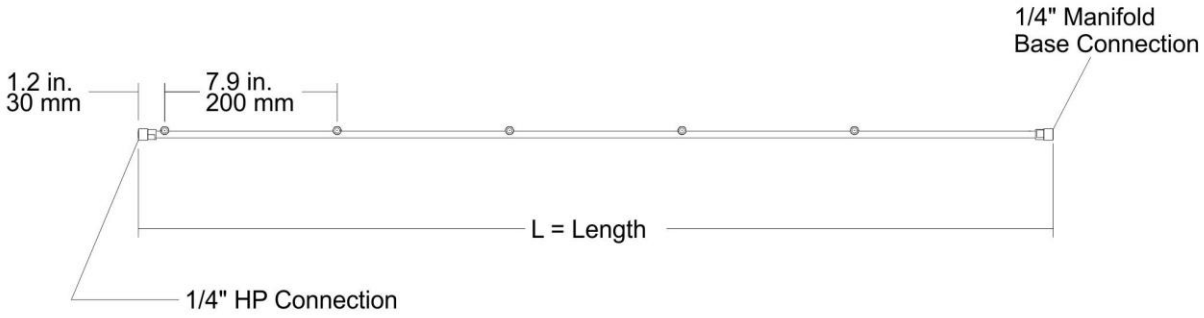

Description	Length (in)	Length (mm)	Nozzle Qty.
Extension Bracket 562	24.0	610	3
Extension Bracket 762	31.9	810	4
Extension Bracket 962	40.0	1015	5
Extension Bracket 1162	48.0	1220	6

condair

HP Series
Nozzle Manifold Extension Assembly
December, 2018

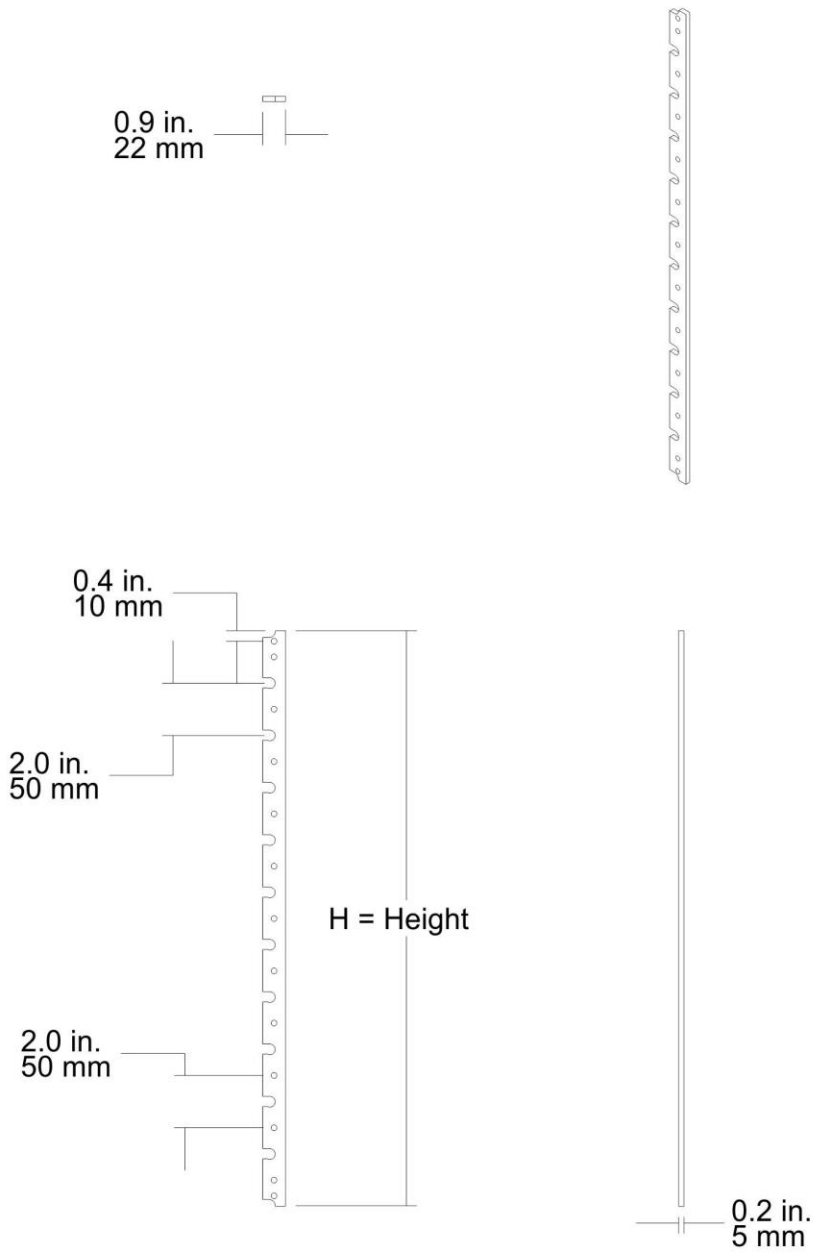

Description	Height (in)	Height (mm)
Mounting Rod, 0.5m	19.7	500
Mounting Rod, 1.0m	39.4	1000

condair

HP Series
Nozzle Manifold Mounting Rod
December, 2018

HP Series Droplet Separator

The Droplet Separator is a single bank droplet removal system, designed to capture water within its media. Entrained water is either evaporated by the passing airflow, increasing water efficiency, or flows down towards the drain pan at the bottom of the duct section.

The droplet separator is commonly installed at a slight upstream angle (10° - 30°). When installed in this way, the top of the droplet separator is farther upstream than the bottom, and airflow drives the water downwards to the drains.

For duct sizes in between the standard sizes, the next largest droplet separator is ordered and trimmed to fit during installation.

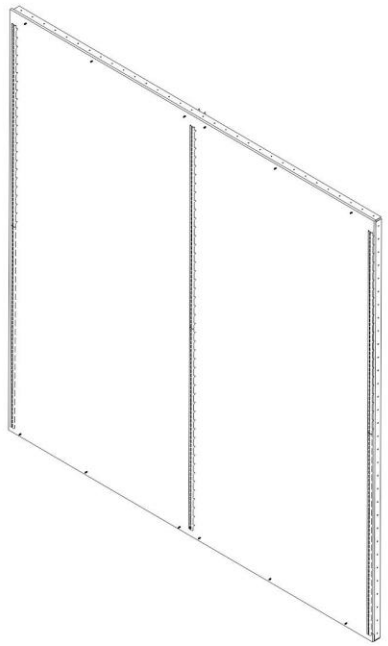

Media Specifications:

Color: White
Coatings: Antimicrobial
UV: Compatible with UV duct sterilization
Thickness: 1" nominal
Basis Weight: 1 oz. per square foot
UL Rating: 900 Class 2

	Size (ft)	
Part Number	Width	Height
2529872	4	4
2529869	4	8
2529864	4	12
2529871	8	4
2529868	8	8
2529863	8	12
2529870	12	4
2529867	12	8
2529862	12	12
2529866	16	8
2529861	16	12
2529865	20	8
2529860	20	12

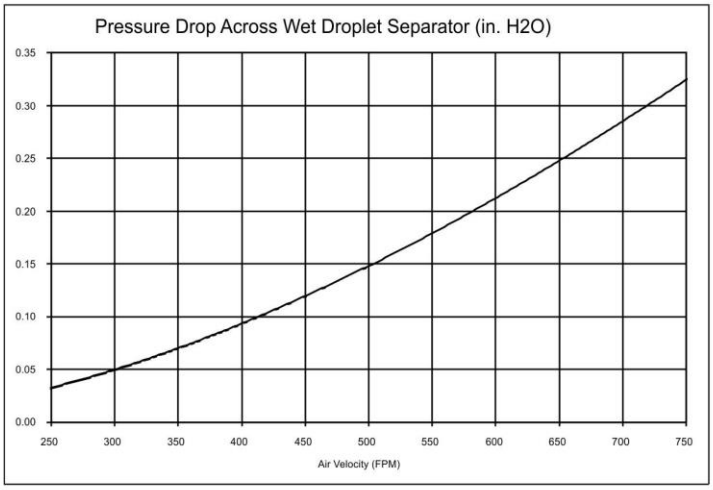

condair

HP Series -
Mist Eliminator (Droplet Separator)
December, 2018

Water Quality Requirements

HP Series

Water Supply	Reverse Osmosis of Demineralized Water
Conductivity	5 - 50 µS/cm
Total Dissolved Solids (TDS)	Maximum 35 mg/l
Potassium Permnganate ($KMnO_4$)	Maximum 10 mg/l
Turbidity	Maximum 1 NTU
Temperature	Maximum 15°C (60°F)
Iron (Fe)	Maximum 0.2 mg/l
Manganese (Mn)	Maximum 0.05 mg/l
Maximum Hardness	Maximum 1° dH (18 ppm $CaCO_3$)
Free Chlorine	Maximum 0.1 mg/l

HP RO Series

Water Supply	Potable Water
Conductivity	250 - 1000 µS/cm
Silt Index	Maximum 3
Potassium Permnganate ($KMnO_4$)	Maximum 10 mg/l
Turbidity	Maximum 1 NTU
Temperature	Maximum 15°C (60°F)
Iron (Fe)	Maximum 0.2 mg/l
Manganese (Mn)	Maximum 0.05 mg/l
Maximum Hardness	Maximum 20° dH (355 ppm $CaCO_3$)
Free Chlorine	Maximum 0.1 mg/l

Modbus TCP/IP Communications

Model: PLC - S7- 1200
Default IP: 192.168.1.101 **Default Mask:** 255.255.255.0
Device ID: 1 **Port:** 502
Block 1 - Integers from PLC to BMS/CTS (7 Integers)
Notes:
- The PLC acts as a server in The network.
- Valve 5 will only show active on masters / slaves with 31 stage controls.
- Slave 1, Slave 2, and Slave 3 are not present on all system configurations.

Point	Type	Address	Range	Unit	Explanation
Load: Master	Integer	40001	0 - 100	l/hr	Shows the humidification load for Master.
Load: Slave 1	Integer	40002	0 - 100	l/hr	Shows the humidification load for Slave 1.
Load: Slave 2	Integer	40003	0 - 100	l/hr	Shows the humidification load for Slave 2.
Load: Slave 3	Integer	40004	0 - 100	l/hr	Shows the humidification load for Slave 3.
Status Integer 1	Integer	40005			Send as an integer. The individual bit is used as boolean as described in the following section.
Status Integer 2	Integer	40006			
Status Integer 3	Integer	40007			
Status Integer 1					
System Active	Boolean	0	0 - 1	0 = Closed, 1 = Open	Indicates system activity.
Master Valve 1	Boolean	0	0 - 1	0 = Closed, 1 = Open	Indicates state of valve 1 for the master.
Master Valve 2	Boolean	0	0 - 1	0 = Closed, 1 = Open	Indicates state of valve 2 for the master.
Master Valve 3	Boolean	0	0 - 1	0 = Closed, 1 = Open	Indicates state of valve 3 for the master.
Master Valve 4	Boolean	0	0 - 1	0 = Closed, 1 = Open	Indicates state of valve 4 for the master.
Master Valve 5	Boolean	0	0 - 1	0 = Closed, 1 = Open	Indicates state of valve 5 for the master.
Slave 1 Valve 1	Boolean	0	0 - 1	0 = Closed, 1 = Open	Indicates state of valve 1 for Slave 1.
Slave 1 Valve 2	Boolean	0	0 - 1	0 = Closed, 1 = Open	Indicates state of valve 2 for Slave 1.
Status Integer 2					
Slave 1 Valve 3	Boolean	0	0 - 1	0 = Closed, 1 = Open	Indicates state of valve 3 for Slave 1.
Slave 1 Valve 4	Boolean	0	0 - 1	0 = Closed, 1 = Open	Indicates state of valve 4 for Slave 1.
Slave 1 Valve 5	Boolean	0	0 - 1	0 = Closed, 1 = Open	Indicates state of valve 5 for Slave 1.
Slave 2 Valve 1	Boolean	0	0 - 1	0 = Closed, 1 = Open	Indicates state of valve 1 for Slave 2.
Slave 2 Valve 2	Boolean	0	0 - 1	0 = Closed, 1 = Open	Indicates state of valve 2 for Slave 2.
Slave 2 Valve 3	Boolean	0	0 - 1	0 = Closed, 1 = Open	Indicates state of valve 3 for Slave 2.
Slave 2 Valve 4	Boolean	0	0 - 1	0 = Closed, 1 = Open	Indicates state of valve 4 for Slave 2.
Slave 2 Valve 5	Boolean	0	0 - 1	0 = Closed, 1 = Open	Indicates state of valve 5 for Slave 2.
Status Integer 3					
Slave 3 Valve 1	Boolean	0	0 - 1	0 = Closed, 1 = Open	Indicates state of valve 1 for Slave 3.
Slave 3 Valve 2	Boolean	0	0 - 1	0 = Closed, 1 = Open	Indicates state of valve 2 for Slave 3.
Slave 3 Valve 3	Boolean	0	0 - 1	0 = Closed, 1 = Open	Indicates state of valve 3 for Slave 3.
Slave 3 Valve 4	Boolean	0	0 - 1	0 = Closed, 1 = Open	Indicates state of valve 4 for Slave 3.
Slave 3 Valve 5	Boolean	0	0 - 1	0 = Closed, 1 = Open	Indicates state of valve 5 for Slave 3.
Alarm Status	Boolean	0	0 - 1	0 = OK, 1 = Alarm	Indicates the state of the alarm functions.
Unused	Boolean	0	0 - 1		Unused bit for future expansion.
Unused	Boolean	0	0 - 1		Unused bit for future expansion.