condair

**CRC-NA**
**1509858**

## A mm (inch)

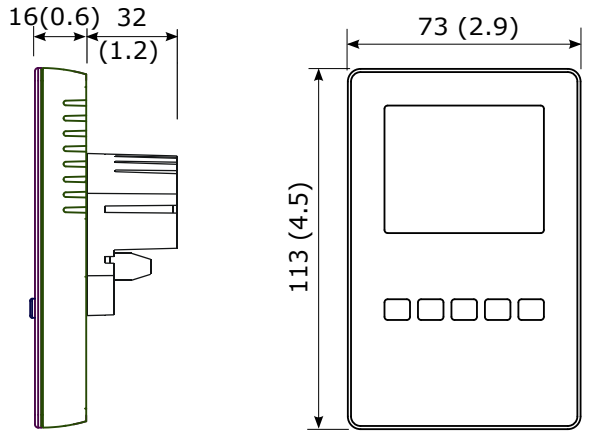


## B

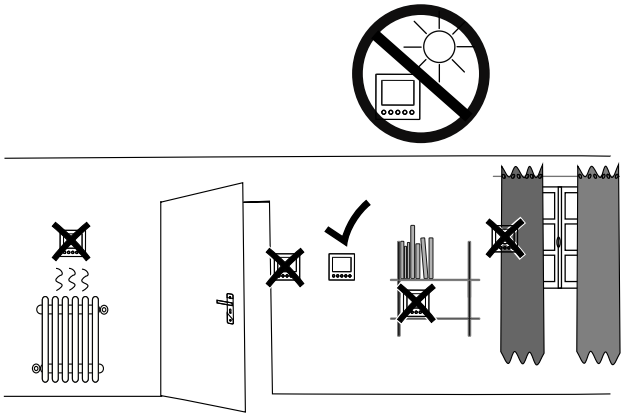

## C

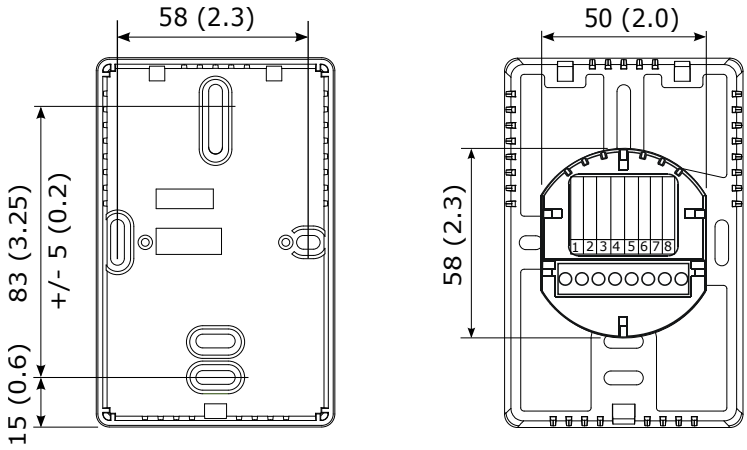


## D

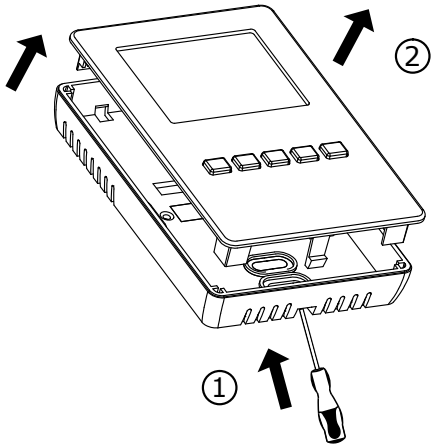


## E

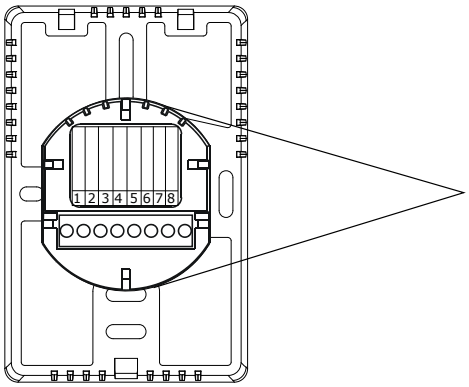


| 0V / GND | 24V | N/A | N/A | N/A | AO 2-10V | N/A | Temp. Reset |
|---|---|---|---|---|---|---|---|
| 1 | 2 | 3 | 4 | 5 | 6 | 7 | 8 |

1: 0V / GND

2: 24 V AC/DC ±10%

3: Do not connect

4: Do not connect

5: Do not connect

6: 2...10VDC

7: Do not connect

8: Temp. Reset

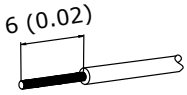


Download on the App Store

GET IT ON Google Play

For Wiring Schematic:

Get the Condair Sensor Connect App

© Condair Group AG, Switzerland